R&S®ZVA
Vector Network Analyzer
High performance up to 110 GHz with up to four test ports

ROHDE&SCHWARZ

Product Brochure | Version 13.00

R&S®ZVA Vector Network Analyzer
At a glance

The R&S®ZVA series is the high-end class of the Rohde & Schwarz network analyzers. It combines operating ease and high measurement speed, uniformly implemented in the R&S®ZVA, R&S®ZVB and R&S®ZVT, with exceptional RF characteristics, a wide scope of functions and high flexibility.

The R&S®ZVA series is an ideal choice for demanding measurements in the lab and in production – from filter measurements requiring maximum dynamic range to linear and nonlinear measurements on amplifiers and mixers as well as on receivers and transceivers.

The R&S®ZVA has set milestones for the most challenging applications:

- First VNA with four internal sources up to 67 GHz for fast two-tone measurements on amplifiers and mixers
- First VNA up to 67 GHz that generates phase-coherent signals
- First VNA with IF bandwidths up to 30 MHz for pulsed measurements on amplifiers and mixers up to 110 GHz

Key facts

- Linear and nonlinear amplifier and mixer measurements
- Noise figure measurements
- Pulse profile measurements with 12.5 ns resolution
- True differential measurements for reliable characterization of active devices with balanced ports
- High output power typ. up to 18 dBm
- Wide dynamic range typ. > 140 dB
- High measurement speed < 3.5 µs per test point
- Wide IF bandwidth: 1/5/30 MHz
- Versatile calibration techniques: TOSM, TRL/LRL, TOM, TRM, TNA, UOSM
- Automatic calibration units
- Phase and group delay measurements on mixers with and without LO access
- Frequency range: 300 kHz to 8 GHz (R&S®ZVA8), 10 MHz to 24/40/50/67/110 GHz (R&S®ZVA24/40/50/67/110)

R&S®ZVA Vector Network Analyzer

Benefits and key features

High measurement throughput

- Short measurement times due to fast synthesizers, wide IF bandwidths and high dynamic range)

▷ page 6

Ergonomic user interface

- More than 100 traces and channels
- Measurement wizard for easy setup of multiport and balanced measurements

▷ page 8

Easy and error-free calibration

- Versatile calibration techniques for test fixtures as well as for coaxial and on-wafer applications
- Automatic calibration with calibration unit

▷ page 10

Quick and reliable measurements on mulitiports and balanced components

- Virtual and true differential mode for linear and nonlinear testing of differential components

▷ page 12

Linear and nonlinear amplifier and mixer measurements

- Simultaneous measurement of noise figure and S-parameters
- Wide power sweep range for small and large signal analysis in one sweep
- Second internal source for fast hot S_{22}, IMD and mixer measurements
- Phase and group delay measurements of the conversion loss on mixers and converters with and without LO access
- Conversion loss measurement of converters with up to three conversion stages
- Intermodulation measurements on mixers

▷ page 14

Options to enhance flexibility, power and dynamic range

- Direct access to the generators and receivers for 30 dBm output power and 150 dB dynamic range
- Time domain with linear prediction for increased resolution

▷ page 18

Convenient handling of pulse profile measurements

- Easy setup of pulse profile measurements with 12.5 ns time resolution and up to 30 MHz measurement bandwidth

▷ page 17

Measurements on active devices made easy

- Extension unit for the R&S®ZVA with integrated combiner, pulse modulators and harmonic filters

▷ page 20

Introduction

Short technology cycles and project-dependent requirements mean that investments need to be made with a strong focus on flexibility and future-readiness.

At the same time, measurement tasks are becoming more complex and require higher measurement precision.

The R&S®ZVA family of vector network analyzers meets these demands by providing excellent measurement speed, dynamic range and measurement precision.
A variety of measurement capabilities build on this solid base to allow the characterization of various components and modules. Complex measurements are supported by measurement wizards to shorten the setup and calibration time and reduce the probability of operator errors.

The R&S®ZVA hardware platform with up to four independent signal sources and two independent receivers per test port is the right base for future measurement requirements and secure investments.

Block diagram of the R&S®ZVA8/24/40/50 four-port models

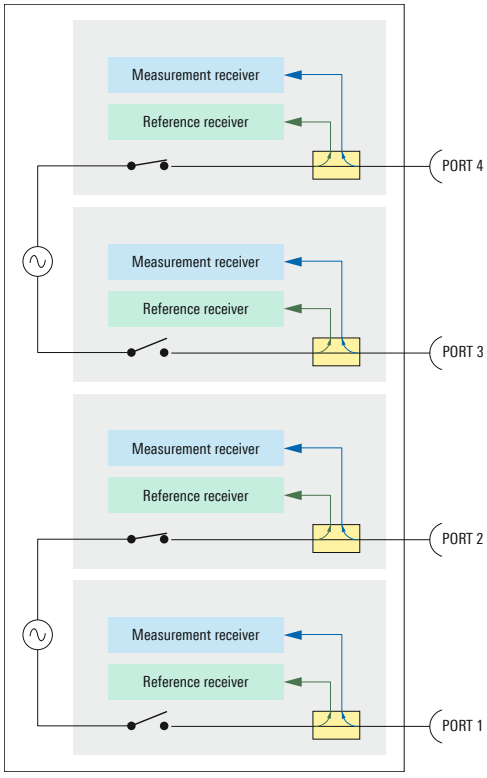

Block diagram of the R&S®ZVA24/40 four-source models and the ZVA67 four-port model

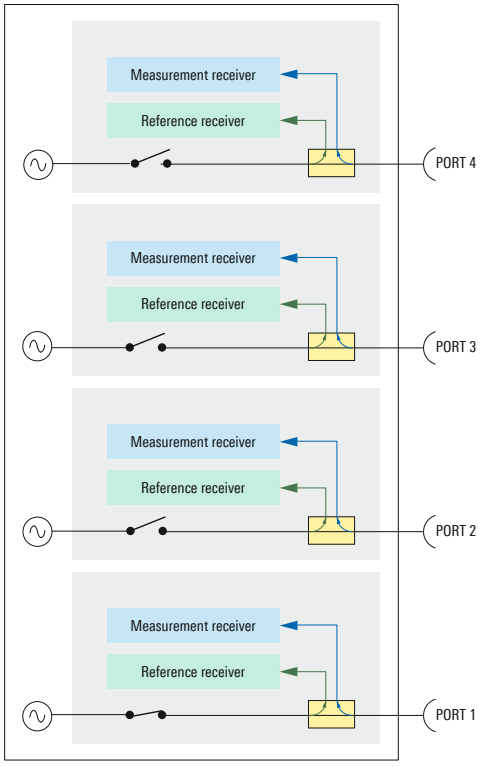

Test set design for enhanced performance and flexibility

The test set includes a number of special design features. There is one measurement channel and one reference channel for each test port, an RF switch in each generator path and a generator for each pair of test ports. The R&S®ZVA24/40 four-source models and the R&S®ZVA67 four-port model even have a generator for each test port. This makes the R&S®ZVA an analyzer of unprecedented performance and functionality, which is especially true for the four-port model:

- True differential measurements on balanced DUTs
- Two or four independent sources, e.g. for LO and RF signals for fast mixer or intermodulation measurements
- Parallel signal output and measurement at the test ports for measuring two or more DUTs simultaneously
- Direct generator/receiver access option to connect external test setups, e.g. power amplifiers, or use as a multichannel receiver, e.g. for antenna measurements
- Generation of up to four coherent signals for A&D applications such as measurement of antenna arrays
- Extendable to active harmonic load pull solutions (four-source models)

Design and operating principle of the R&S®ZVA110

The R&S®ZVA110 consists of an R&S®ZVA67 four-port base unit that is enhanced by two R&S®ZVA-Z110E W-band converters with electronic attenuator and diplexer.
The overall system has two test ports with 1 mm connectors located on the diplexer outputs.

In the frequency range from 10 MHz to 67 GHz, the test signal will be generated in the R&S®ZVA67 four-port network analyzer and routed to the 1 mm test ports via diplexers. From 67 GHz to 110 GHz, the diplexers switch over and the test signal is routed to the test port via the converters and diplexers.

A bias signal can also be fed to the active components via the diplexers.

The R&S®ZVA-Z110E converters with electronic attenuators allow both level sweeping with compression point measurement and level calibration at the input of the amplifier under test.

Number of sources of the R&S®ZVA

	two-port	four-port	four-port with four sources	Upgrade options
R&S®ZVA8	1 (model .08)	2 (model .10)	–	
R&S®ZVA24	1 (model .24)	2 (model .26)	4 (model .28)	R&S®ZVA24-U5: upgrade from R&S®ZVA24 model .26 to four sources
R&S®ZVA40	1 (models .40/.43)	2 (models .42/.45)	4 (model .48)	R&S®ZVA40-U5: upgrade from R&S®ZVA40 model .26 to four sources
R&S®ZVA50	1 (model .50)	2 (model .52)	–	
R&S®ZVA67	2 (model .02)	–	4 (model .04)	

R&S®ZVA110 with continuous sweep from 10 MHz to 110 GHz.

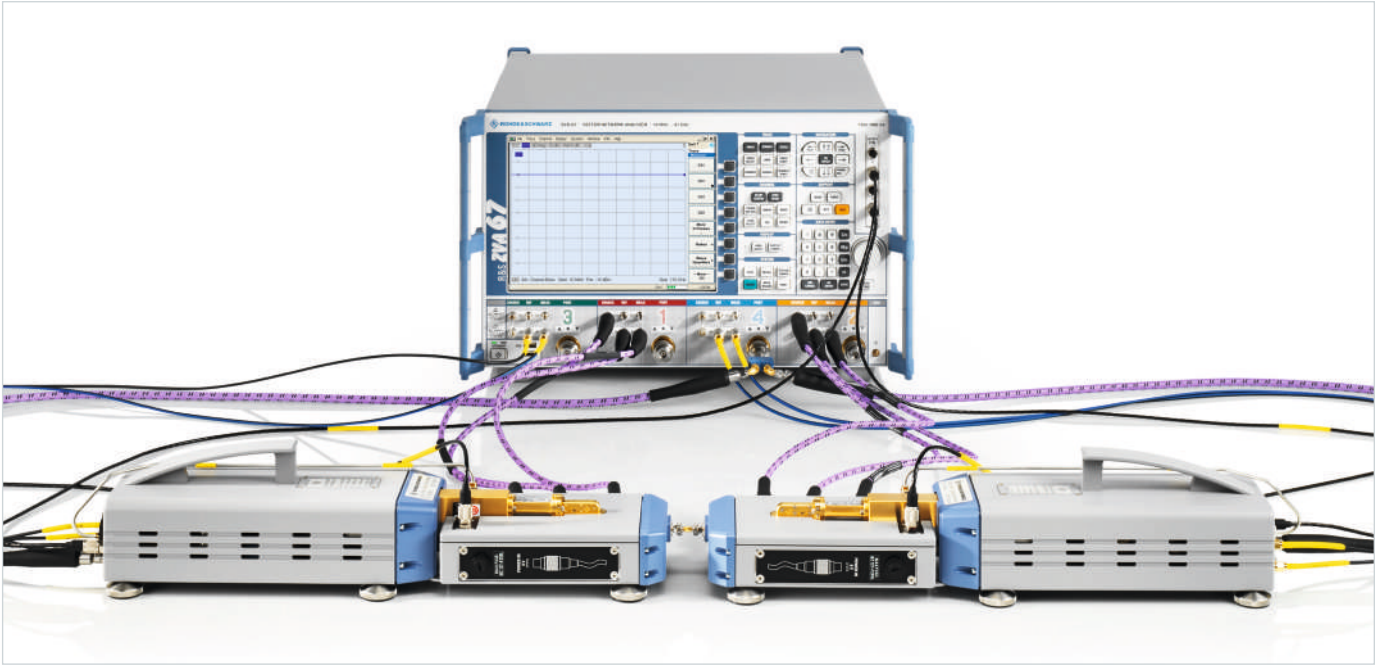

High measurement throughput

Wide dynamic range for fast and accurate measurements

The R&S®ZVA sets new standards in measurement speed. Its large IF bandwidths and fast synthesizers combine to yield short measurement times and high throughput in manual adjustments and automated production sequences. The measurement time per test point is less than 3.5 µs in the CW mode; a frequency sweep over 200 test points takes less than 5 ms.

Due to the analyzer's wide dynamic range and low phase noise, this speed advantage does not compromise measurement accuracy.

Fast switching between instrument setups

When analyzing two or more DUTs, the required instrument setups no longer have to be loaded from the hard disk one after the other. Once called, setups remain available in RAM, including calculated data, e.g. calibration values obtained by interpolation. Switching between setups can be done virtually without delay, i.e. in less than 10 ms by remote control. With conventional instruments, recalling setups can take up to one second. Each setup is represented by a separate measurement window.

This design feature also makes it easier to handle large volumes of measured data. If a display area becomes too "crowded", data can easily be distributed to other windows (setups). You can easily switch between windows by using the mouse or pressing a key.

Segmented sweep for optimized speed, accuracy and dynamic range

The segmented sweep function allows you to divide a sweep into a virtually unlimited number of segments. Sweep parameters such as test point spacing, measurement bandwidth and generator power can be defined separately for each segment and accurately matched to the DUT characteristic. Measurement speed and accuracy can thus be further optimized.

Dynamic range between test ports at 10 Hz IF bandwidth.

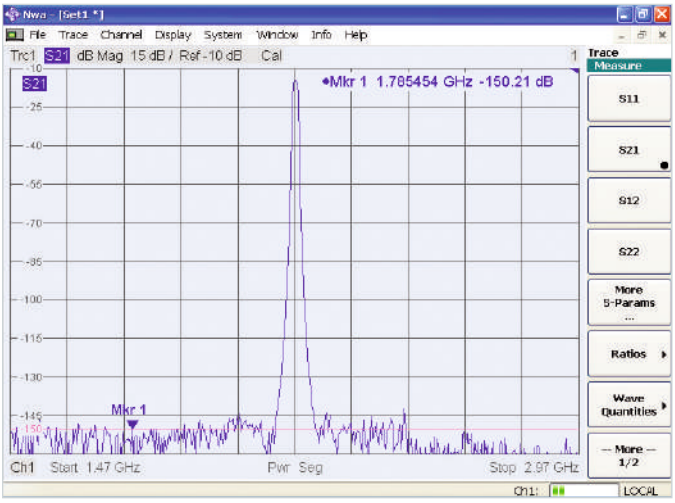

Switching between setups at the click of a mouse.

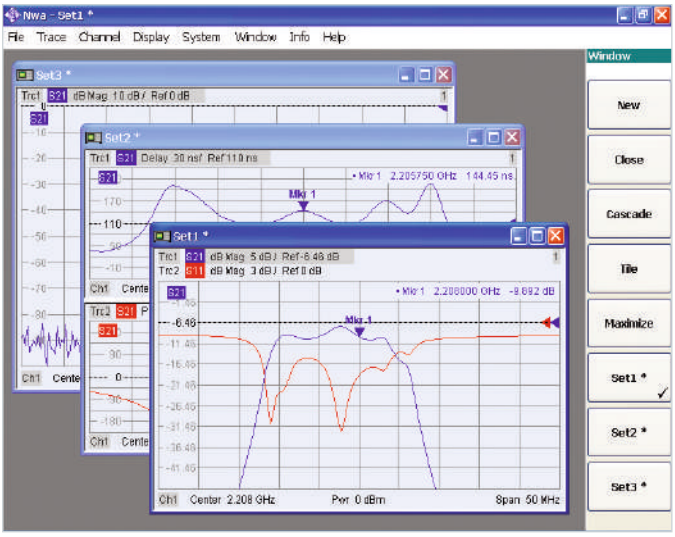

Parallel measurements – up to four times faster

In addition to the standard operating mode, the concept of the R&S®ZVA allows test ports to be organized in groups, e.g. in two groups of two ports each or in four groups of one port each. Measurements are carried out on the various groups simultaneously, provided the test parameters are identical for each group. This means that measuring two or more DUTs in the parallel mode takes no more time than measuring a single DUT in the standard mode. Compared to sequential measurements, measurement speed will therefore double when measuring two two-port DUTs in parallel and quadruple when measuring four one-port DUTs in parallel.

Data transfer simultaneously with sweep

Since trace data is transferred via the IEC/IEEE bus or LAN at the same time measured data is being captured, data transfer time on the R&S®ZVA is insignificant.

Channel bits and user port – high-speed control of external devices

To speed up automatic test cycles even further, a special port for trigger I/O signals and status indication is provided on the rear panel. These signals directly synchronize external devices of a test setup or the settings of a DUT with the internal measurement sequences of the R&S®ZVA. No remote control sequences are required, which saves execution time. The pins of the USER CONTROL port also provide information on the net time required for measuring one point, one sweep or carrying out a partial measurement. This makes it easy to determine net measurement times and optimize synchronization.

Parallel measurements

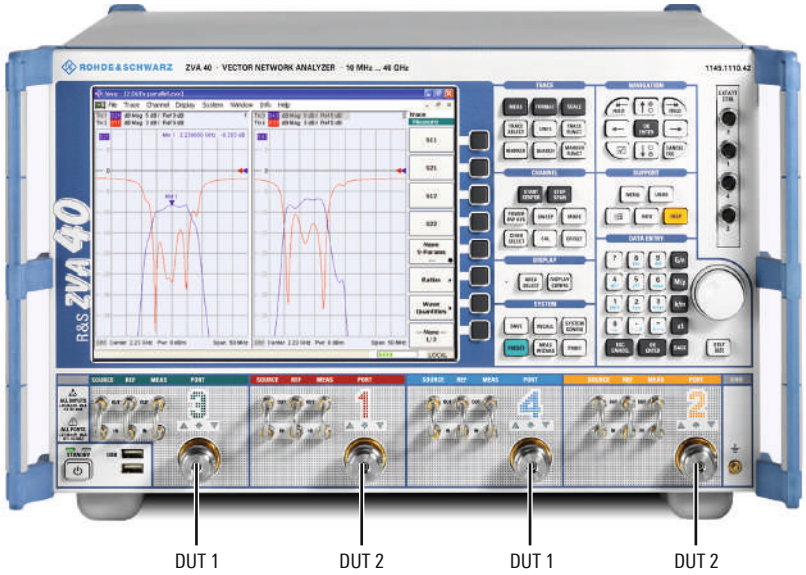

The test signals are applied to the DUTs simultaneously. Measurements are also carried out simultaneously. Compared to the standard (sequential) mode, measurement throughput is four times higher with the test configuration shown here (S_{11} measurement on four DUTs).

Ergonomic user interface

State-of-the-art DUTs feature a steadily increasing number of complex functions and ports, which also places higher demands on the instrument's display capabilities. The R&S®ZVA provides highly versatile functions for displaying results in a straightforward manner.

Virtually unlimited number of channels and traces

Over 100 traces can be combined in any manner within the individual diagrams and assigned to over 100 different channels. DUTs can thus be measured using a wide variety of stimulus conditions, and all parameters of interest can be displayed on the screen. The names of traces, channels and markers can be edited and replaced by user-specific names to make them easier to identify.

Easy export and import of results

The use of the Windows Embedded Standard 7 operating system, in conjunction with a variety of interfaces, makes it easy to integrate measurement results into documentation by saving screen contents as *.bmp, *.png, *.jpg or *.emf files and exporting these files to a text processing system. Trace data can be stored as *.snp, *.csv or *.dat files and subsequently analyzed and processed using other tools. In addition, externally created files such as *.snp and *.csv files can be imported into the R&S®ZVA as stored trace data.

Convenient equation editor for complex trace mathematics

The R&S®ZVA includes a universal equation editor with extensive functions for trace mathematics. These functions can be used to link any active traces and stored traces in a variety of ways in realtime. This makes external analysis programs unnecessary. Generated equations can be stored, processed with external tools and reloaded as required.

Equation editor.

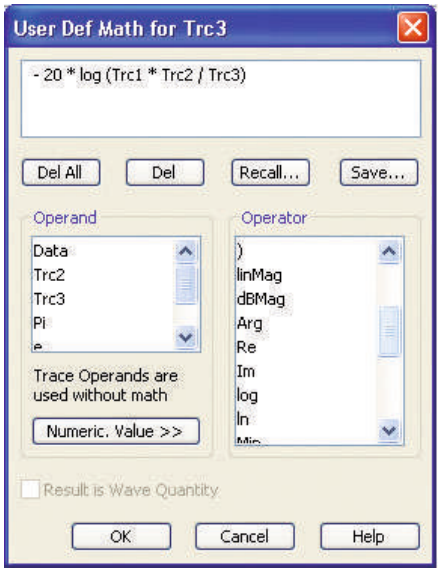

Flexible channel and trace layout.

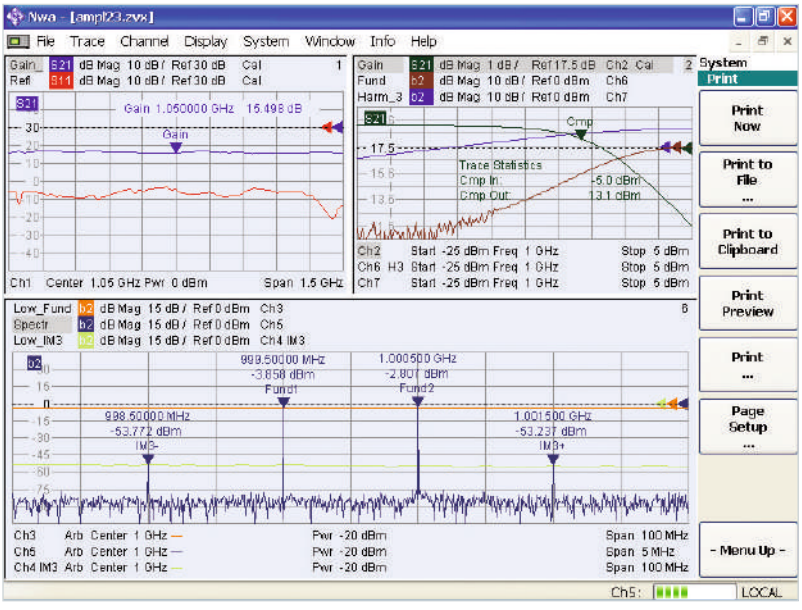

Typical configuration steps with the measurement wizard.

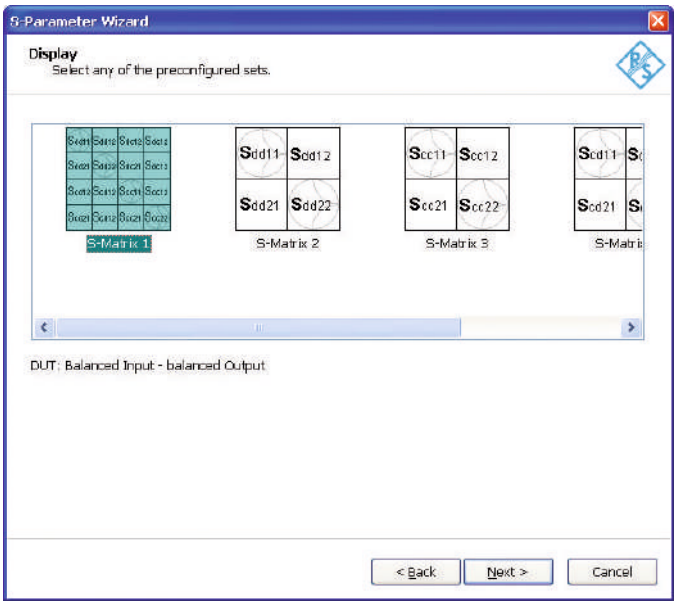

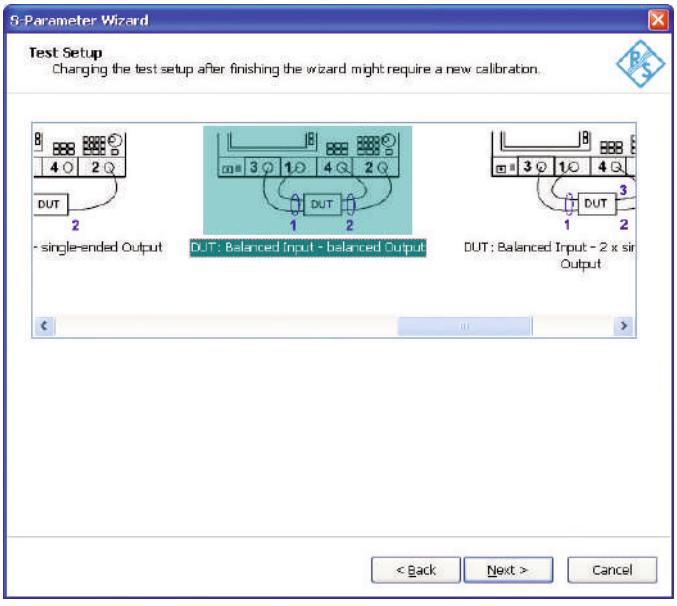

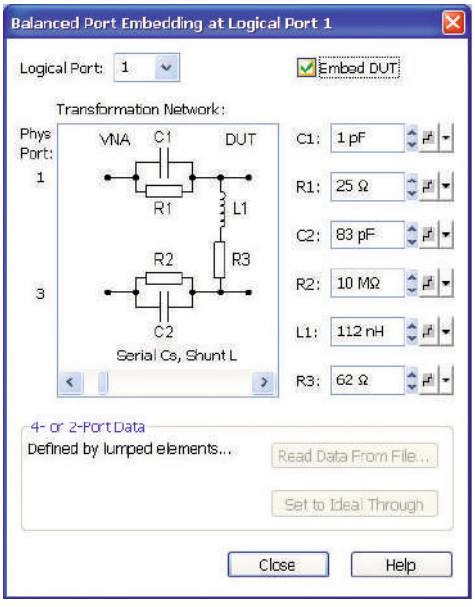

Parameterizable network for virtual impedance matching.

Measurement wizard – step by step to the test setup you want

Measuring multiports and balanced DUTs with a network analyzer usually requires major configuration effort on the part of the user, for example for configuring the port topology, selecting the parameters to be displayed, setting the sweep mode or choosing the appropriate calibration technique. With the R&S®ZVA, a measurement wizard guides you step by step through the test setup to create the configuration you want. It queries all necessary inputs and offers default settings for the measurement task at hand. Using the wizard, you can e.g. configure the R&S®ZVA to display all 16 mixed-mode S-parameters of a balanced two-port in virtually no time.

Embedding/deembedding – impedance matching using virtual networks

Coaxial and balanced components such as SAW filters, which are used in frontends of mobile phones, for example, must be specified together with the networks that match them to the impedance of the surrounding circuit. In addition, parasitic effects, which occur when the DUT is installed in its operational environment, can be simulated. Using special algorithms, the R&S®ZVA embeds the DUT in virtual matching networks and also deembeds it to eliminate parasitic effects such as those caused by strip lines.

The R&S®ZVA offers various types of transformation networks. The values of the network elements can be edited. If you modify values of individual elements, the R&S®ZVA immediately recalculates the network and (de)embeds the DUT in the new network in quasi-realtime.

Alternatively, you can read *.s2p and *.s4p files generated with EDA tools into the R&S®ZVA and use the data for embedding/deembedding.

Easy and error-free calibration

Versatile calibration techniques for all fields of application

The R&S®ZVA not only offers classic TOSM calibration (**T**hrough, **O**pen, **S**hort, **M**atch), but also a variety of other calibration techniques. Since each test port of the R&S®ZVA is equipped with a reference receiver of its own, modern seven-term calibration techniques can be used. These include TRL/LRL (**T**hrough, **R**eflect, **L**ine/**L**ine, **R**eflect, **L**ine), TOM (**T**hrough, **O**pen, **M**atch), TNA (**T**hrough, **N**etwork, **A**ttenuator) and TRM (**T**hrough, **R**eflect, **M**atch), which are suitable for calibration in test fixtures or on wafers. Since calibration is performed directly on the DUT plane, any effects from the test fixture are eliminated.

Automatic calibration – fast, error-free and with high precision

While all manual calibration techniques such as TOSM, TRM and TRL can be used for multiport measurements, they are time-consuming, error-prone and lead to excessive wear of the calibration standard. Rohde & Schwarz offers an automatic calibration unit for coaxial one-port and multiport calibration. The unit is ready to operate immediately after being connected and performs complete four-port calibration covering 201 test points in less than 30 seconds.

The R&S®ZVA allows any combination between the analyzer's test port connectors and the connectors of the calibration unit. The analyzer detects the connections automatically. Errors due to wrong connections are a thing of the past.

The R&S®ZVA's firmware also allows the recharacterization of calibration units by the user. Moreover, it is possible to characterize a calibration unit together with an adapter of any type. By treating the adapter as part of the calibration unit, the R&S®ZVA supports any combination of connector types, which means that the calibration unit itself can be equipped with up to four different connectors. User-specific adapters can also be placed on the connectors of the calibration unit, which protects the connectors against wear.

R&S®ZN-Z51 calibration unit.

Adapter removal functionality

The UOSM (**U**nknown Through, **O**pen, **S**hort, **M**atch) calibration technique allows a through connection with unknown parameters to be used as a calibration standard. This makes it possible to use any adapter with all types of connectors as a "U" (adapter removal functionality), thus supporting calibration of a DUT with different connector types.

R&S®ZV-Z4xx verification kits for reliable proof of measurement accuracy

The R&S®ZV-Z4xx verification kits are used to confirm the rated specifications and measurement accuracy of the Rohde & Schwarz vector network analyzers under the given environmental conditions and test parameters. The kits include offset short, mismatch, attenuator and stepped through standards. Both one-port and two-port verification is supported. The verification kits support measurements on directly insertable male-to-female connections. Male-to-male and female-to-female reference planes can be verified by using an adapter and adapter deembedding. The R&S®VNAMUC vector network analyzer measurement uncertainty calculator is a multifunctional software tool that offers uncertainty calculation and support the verification process.

R&S®ZV-Z3xx T-Check verification devices

The R&S®ZV-Z3xx T-Check verification devices are used to perform a quick and simple plausibility check of the measurement accuracy. From the S-parameters measured on the R&S®ZV-Z3xx T-Check verification devices, the R&S®VNAMUC software calculates the deviation in percent compared to an "ideal" VNA without any uncertainty. The unique Rohde & Schwarz T-check procedure is the compromise between reliability, effort and investment, making it the ideal tool for uncertainty checks and tracing in production lines, or everday lab work. Each device is designed as a male-to-female component, supporting verification on directly insertable two-port connections. Male-to-male and female-to-female reference planes can be verified by using an adapter and adapter deembedding.

R&S®ZN-Z151/-Z153/-Z152 calibration units.

Quick and reliable measurements on multiports and balanced components

Virtual differential measurement mode

The R&S®ZVA characterizes balanced DUTs with one or two balanced ports quickly and accurately. The balanced DUT is directly connected to the analyzer test ports. Its unbalanced S-parameters are measured, and the mixed-mode S-parameters are calculated from these values.

The numerous traces and diagrams offered by the R&S®ZVA provide full characterization of the DUT and straightforward display of all measurement quantities. No sophisticated settings are required on the part of the user. Convenient marker search and analysis functions facilitate result evaluation especially in the case of filter measurements, for example by determining filter parameters such as bandwidth, ripple and quality factor.

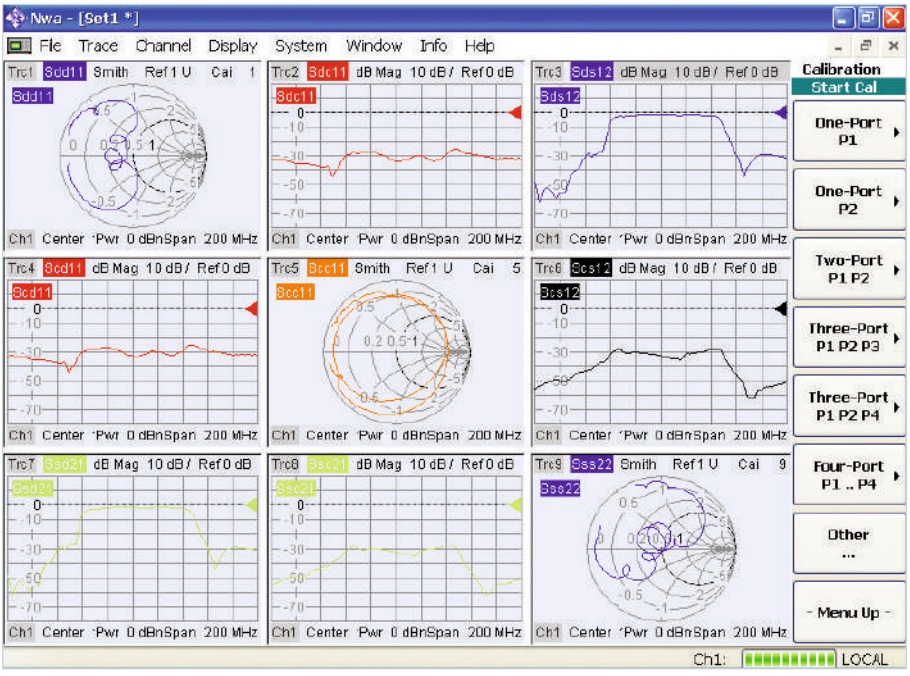

Display of mixed-mode S-parameters of a SAW filter: A configuration wizard configures all 9 or 16 S-parameters at a few keystrokes.

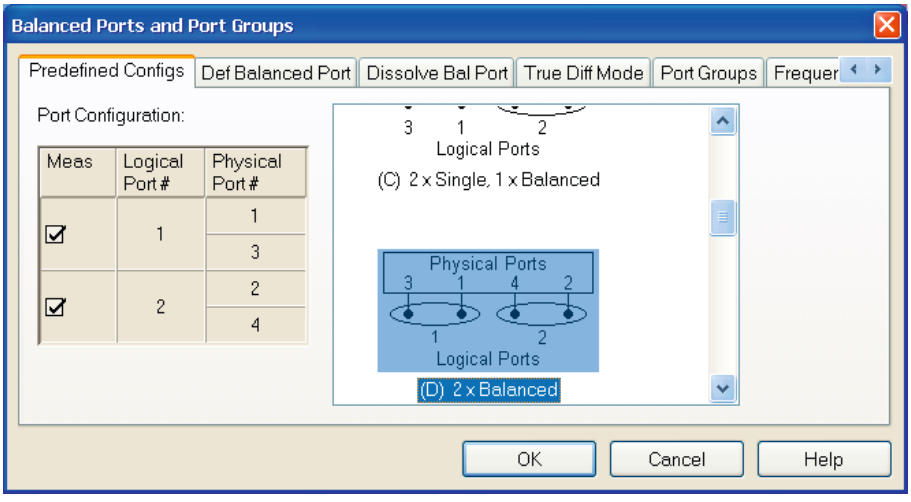

Dialog for configuring balanced and measured ports: The true differential mode is selected at a single mouse click.

True differential measurement mode

Active components in particular may show a distinctly different response to a stimulus signal, depending on whether the virtual (standard) or the true differential measurement mode is applied.

To obtain reliable results even for active differential DUTs, the R&S®ZVA-K6 option provides true differential stimulation and measurements. The test signals delivered by the two internal generators are applied at the reference plane simultaneously with 0° or 180° phase difference. The measurements on the selected test ports are performed simultaneously. The R&S®ZVA-K6 option also supports true phase imbalance and true amplitude imbalance sweeps of the two stimulus signals.

As with standard measurements, calibration is performed either manually using a calibration kit or automatically with a calibration unit.

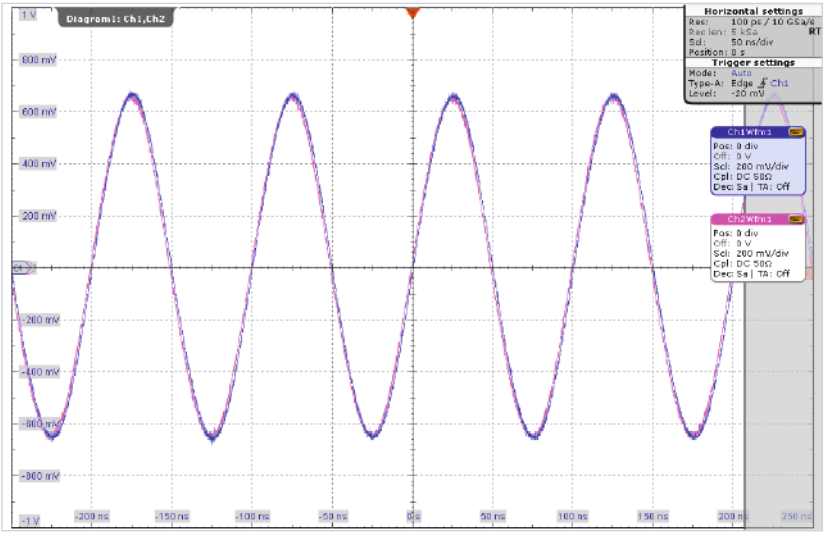

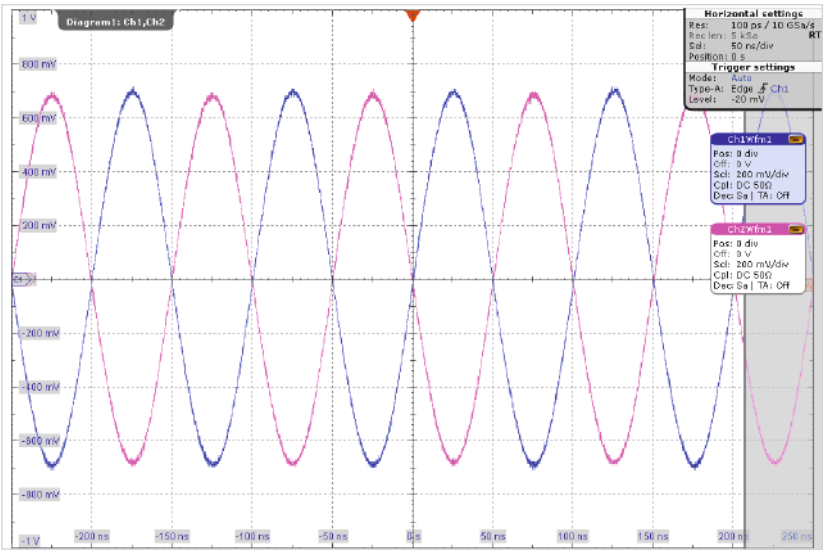

Stimulus signal for true differential measurements: Output signals of two R&S®ZVA ports in true differential mode (measured with an oscilloscope) using stimulus signals with 0° and 180° phase difference.

Linear and nonlinear amplifier and mixer measurements

The R&S®ZVA system concept, featuring independent synthesizers, enables measurements on amplifiers and frequency-converting DUTs such as mixers and frontends. The measurements stand out for their high versatility, wide dynamic range, high speed and accuracy.

Internal as well as several external generators can be configured, calibrated and controlled independently of one another. The high spectral purity of the source signals as well as the high intercept point and high sensitivity of the receivers eliminate the need for external filters in multitone measurements and measurements on frequency-converting DUTs.

Large- and small-signal behavior in a single sweep

The analyzer's high output power and wide power sweep range of more than 50 dB (typ. 60 dB) allow the transmission and compression characteristics of amplifiers and mixers to be determined largely without any additional preamplifiers. This measurement is carried out simply and quickly versus frequency and power. The power sweep range is traversed wear-free and without interruption since no mechanical attenuators have to be switched. Small- and large-signal behavior can thus be displayed in a single sweep.

Dialog for configuring multitone measurements.

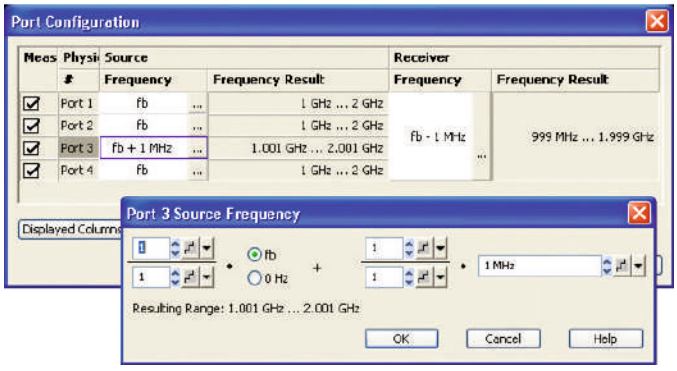

Simultaneous measurement of noise figure and S-parameters

The R&S®ZVA receiver architecture, which includes an average and an RMS detector, makes it possible to measure the noise figure and the S-parameters of an amplifier simultaneously without having to modify any connections on the DUT. The method requires neither a noise source nor an impedance tuner; all that is needed is a power meter for calibration. This simplifies the test setup and reduces measurement and operator errors.

Intermodulation products of a frontend.

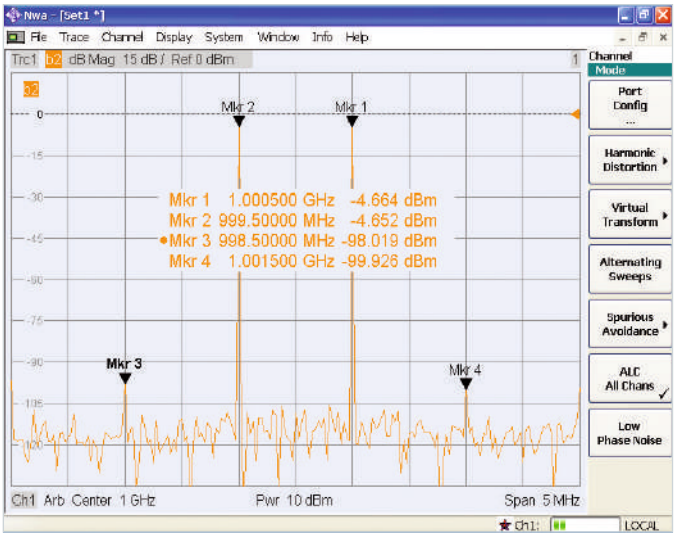

Easy intermodulation and mixer measurement with four independent sources

The R&S®ZVA24 and R&S®ZVA40 models are available with four independent sources. The four-port R&S®ZVA67 always offers four independent sources. This allows intermodulation measurements on amplifiers and mixers and conversion gain measurements on mixers with up to three conversion stages to be performed without external generators. The R&S®ZVA receivers feature very good power-handling capability and low phase noise, which enables high-quality intermodulation measurements requiring only a minimum of external components.

Hot S-parameter measurements – optimization of amplifiers under full load conditions

Power amplifiers must be characterized under full load conditions to ensure that they are optimally matched to the load connected to their output. To determine S_{22} under realistic operating conditions, a stimulating signal is applied to the amplifier input. A low-power signal – which is the actual S_{22} test signal – is applied to the amplifier output (i.e. in the reverse direction). To separate the high-power output signal of the amplifier from the reflected low-power signal, the two sources are swept in parallel, but with a small frequency offset. Only the desired S_{22} measurement signal passes through the IF filter. The R&S®ZVA performs this measurement with a wide dynamic range using the high selectivity and sensitivity of its receivers.

Conversion gain and intermodulation measurements on mixers at high speed and with wide dynamic range

The R&S®ZVA8/24/40/50 four-port two-source models require only one additional external source to perform intermodulation measurements on mixers. The R&S®ZVA24/40 four-source models and the R&S®ZVA67 four-port model do not require any additional source for this measurement. The external source is controlled via the analyzer's LAN or IEC/IEEE bus interface. Using the frequency conversion option (R&S®ZVA-K4), you can display a mixer's matching, conversion gain, isolation, group delay and intermodulation products versus frequency and power.

Absolute phase measurements on mixers

Any mixer-based receiver system requires that the built-in mixers have well-controlled amplitude, phase and group delay responses. The R&S®ZVA-K5 option makes it possible to characterize all four complex S-parameters of a mixer with LO access, including absolute phase and group delay of the conversion loss. This measurement uses full two-port calibration, which yields high measurement accuracy.

Group delay measurement on converters without LO access

The R&S®ZVA offers a new technique for measuring the group delay and relative phase of frequency converters without access to the embedded local oscillator or its reference signal. This method requires a four-port R&S®ZVA with two sources to apply a two-tone signal to the converter. The R&S®ZVA evaluates the group delay by measuring the phase differences between both carriers at the input and the output of the DUT. Frequency drift or even frequency modulation of the internal LO does not affect the measurement result as long as the frequency deviation is within the measurement bandwidth of the R&S®ZVA.

Test setup for an amplifier measurement

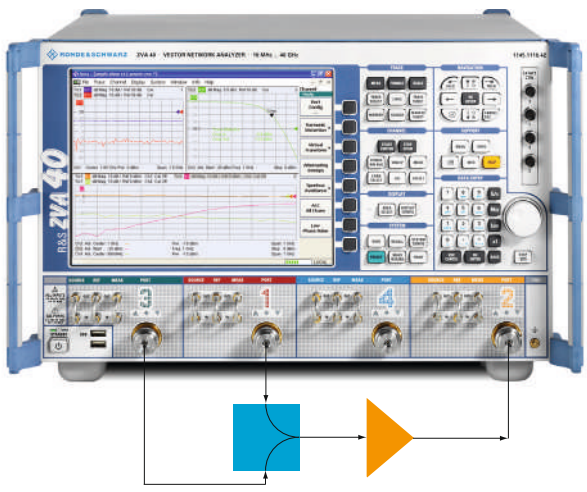

Measurement of intermodulation products, S-parameters, compression and harmonics

Test setup for a mixer measurement

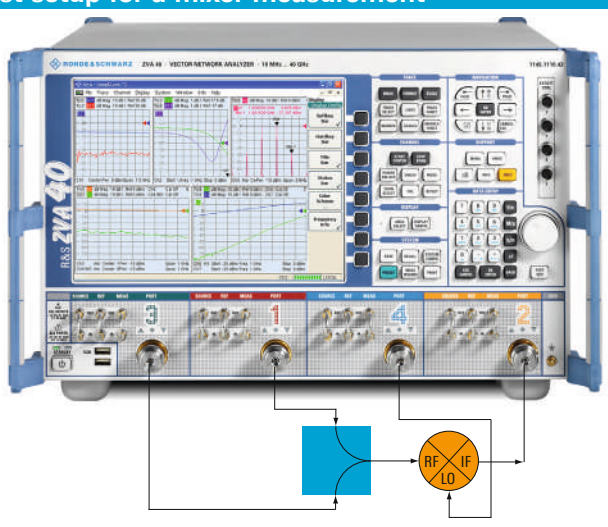

Measurement of conversion loss, isolation, matching and intermodulation products with a four-port R&S®ZVA67 offering four sources

Power measurements and scalar network analysis with the R&S®NRP2

One or more R&S®NRP2 power meters can be directly connected to the R&S®ZVA via the USB interface or by using an active USB hub. The power meters are treated by the R&S®ZVA like additional test ports. The R&S®ZVA processes the measured values and displays them as traces versus frequency or power. Besides adding power measurement inputs to the R&S®ZVA, this functionality allows measurements on frequency-converting DUTs to be performed without access to, or knowledge of, the DUT's internal LO, in the same way as with a scalar network analyzer.

Test setup for scalar mixer measurement

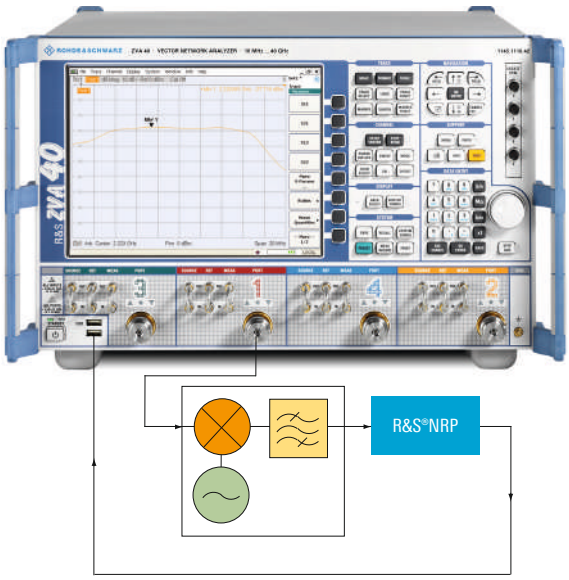

Feature overview

Features for amplifier measurements

- Bias-tees at all test ports
- High output power at all test ports
- Wide power sweep range
- High 0.1 dB compression point
- RMS and peak detector
- Determination of n-dB compression point
- Second independent source (four-port model) for intermodulation measurements
- Power added efficiency (PAE) measurement
- Measurement of efficiency and stability factors
- DC inputs for measuring supply currents and power detector characteristics
- Intermodulation measurement versus frequency and power (R&S®ZVA-K4)
- Hot S-parameter measurements (R&S®ZVA-K4)
- Generator and receiver step attenuators for expanding the usable power range (R&S®ZVA-B2x/-B3x)
- Power measurement with the R&S®NRP power meter
- Measurements on pulsed signals (average pulse, point-in-pulse, pulse profile (R&S®ZVA-K7/-B7)
- Noise figure measurements (R&S®ZVAB-K30, R&S®ZVA-K31)

Features for mixer measurements

- Conversion loss/gain, compression, intermodulation, isolation and matching measurements versus frequency and power (R&S®ZVA-K4)
- Relative phase and group delay measurements of conversion loss of mixers with LO access (R&S®ZVA-K4)
- Magnitude, absolute phase and group delay measurements of conversion loss of mixers with LO access (R&S®ZVA-K4, R&S®ZVA-K5, R&S®ZVA-B16); the measurements are vector-error-corrected and thus very accurate
- Absolute group delay and relative phase measurements of conversion loss of converters without LO access (R&S®ZVA-K4, R&S®ZVA-K9, R&S®ZVA-B16)
- Second internal source available as LO for conversion gain measurements
- Three of four internal sources of the four-source R&S®ZVA24/40 or the four-port R&S®ZVA67 for intermodulation measurements
- Control of external generators from Rohde&Schwarz and other manufacturers
- Editable ASCII driver file for creating customized drivers for SCPI-compatible instruments
- Scalar network analysis with the R&S®NRP power meter

Convenient handling of pulse profile measurements

The R&S®ZVA performs typical pulsed measurements such as point-in-pulse or high-PRF-mode measurements by means of the direct generator/receiver access option. The R&S®ZVA-K7 and R&S®ZVA-B7 pulsed measurements options provide a convenient, high-performance solution especially for pulse profile measurements: Even the profiles of very short pulses with a duration down to ~150 ns are represented with a resolution of 12.5 ns in the time domain. Traces are updated at a high rate, which greatly facilitates adjustment procedures.

The R&S®ZVA displays amplitude characteristics (the powers measured in the measurement and the reference channels, and their ratios), as well as S-parameters in magnitude and phase. Single pulses, double pulses and pulse trains up to 3 ms length (R&S®ZVA-K7) or 25 ms length (R&S®ZVA-B7) can easily be measured. The options include methods for compensating for the group delay of the DUT, which makes it possible to measure pulses whose length is shorter than the group delay of the DUT. IF bandwidths up to 30 MHz are available for short pulses.

Principle of pulse profile measurement

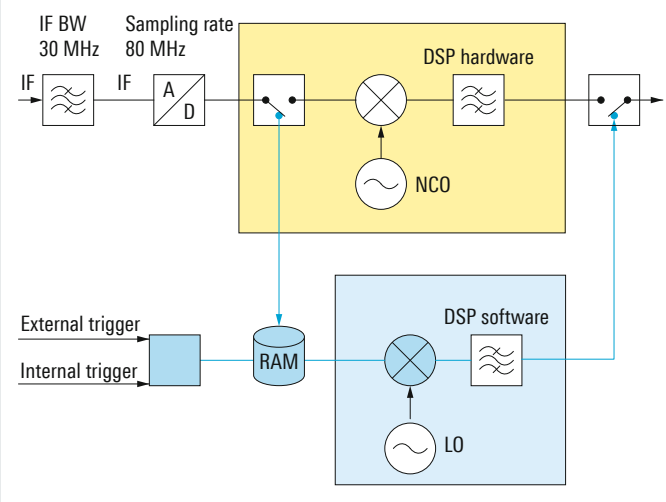

Principle of pulse profile measurements

The A/D converter outputs uncorrected sampling values, which are first stored in a high-speed buffer (RAM) and then digitally processed block by block by the software (see blue arrows in block diagram). Therefore, with sampling performed independently of signal processing, the pulse signal can be sampled at the converter's maximum rate of 80 MHz.

Pulse profile measurement; input power, output power and S-parameter.

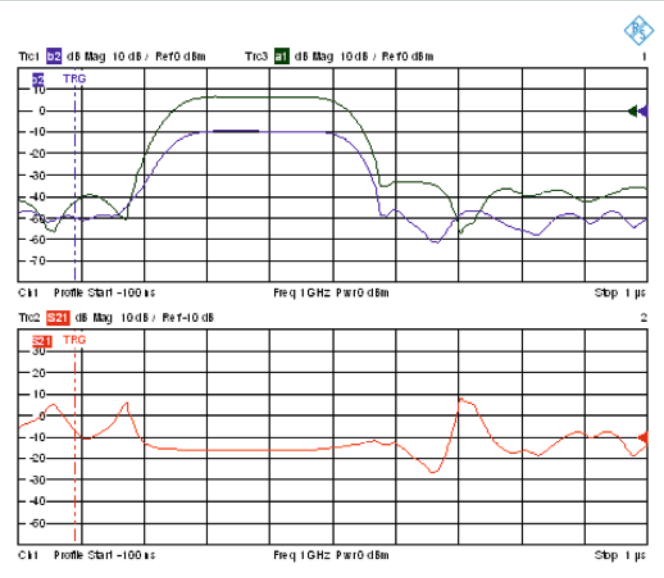

Options to enhance flexibility, power and dynamic range

Direct generator and receiver access options (blue); generator and receiver step attenuator options (red)

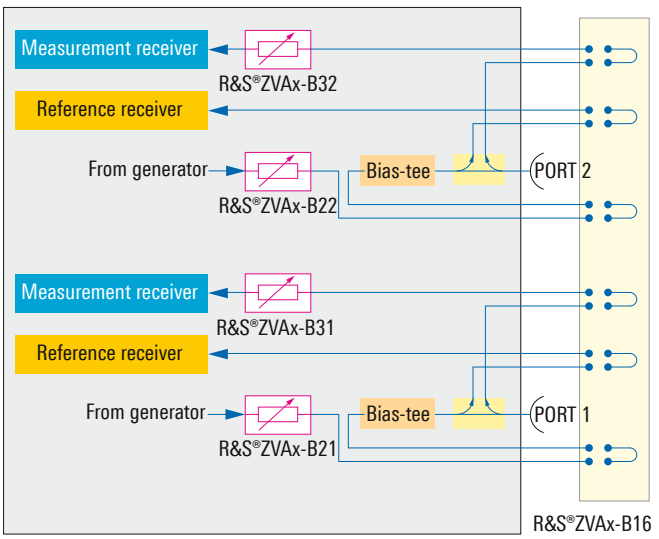

Typical dynamic range with direct receiver access.

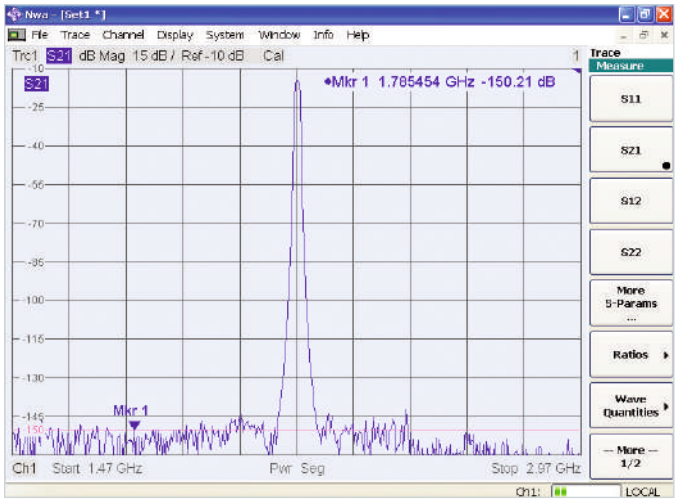

Direct generator and receiver access for all ports

With the direct generator/receiver access options, the signal paths of the receivers and generators are taken directly to the front panel. You have direct access to the generators and receivers of all reflectometers since the internal couplers are bypassed. With a fully configured R&S®ZVA, i.e. with four ports, all eight receivers can capture and process measurement data in parallel.

Generator and receiver step attenuators are optionally available for each port to expand the usable generator and receiver power ranges for compression and intermodulation measurements. The output power range at the test port can be decreased to < –100 dBm; the compression-free input power range of the receiver will increase to +27 dBm.

Up to 150 dB dynamic range with direct receiver access

Since the couplers are bypassed and therefore introduce no attenuation, sensitivity is increased by up to 10 dB in the direct mode. This means that high-blocking DUTs can be measured with a dynamic range of up to 150 dB at 1 Hz IF bandwidth.

By connecting suitable external directional couplers, one- and two-port calibration techniques can be used to enhance measurement accuracy without any significant loss in dynamic range.

Output power boosted to +30 dBm for amplifier measurements

Direct access to all generator and receiver paths allows flexible configuration of complex external test sets. Such test sets may include filters for improved harmonic suppression or amplifiers for boosting the output power. The output power can be increased to +30 dBm by inserting a preamplifier in the generator path and inserting suitable attenuators in the measurement and reference paths.

Connecting external components (e.g. amplifiers) ahead of the reference path eliminates drift and temperature response in S-parameter measurements. Moreover, all calibration techniques are available, and the user fully benefits from the advantages of high measurement accuracy and long-term stability.

High-speed time domain analysis with enhanced resolution capability

Using the time domain option, you can, for example, locate discontinuities in test fixtures and cables and analyze them, e.g. by means of a gated S-parameter measurement. You can display impedance versus length, which is of interest in cable measurements. Due to the R&S®ZVA's high computing power, the time domain option barely slows down sweep speed. Thus, this option allows cavity resonator filters to be adjusted quickly and easily.

The time domain option can be used in conjunction with various window functions such as Hamming, Hann, Bohman or Dolph-Chebyshev.

With conventional TDR methods, the resolution, i.e. the width of reflected-signal peaks and the rise time of step responses, is limited by the network analyzer's frequency range. The R&S®ZVA does away with this limitation. Its linear prediction function expands the frequency spectrum by way of computation. Using this function, you can analyze considerably finer structures than was previously possible due to the limitation to the analyzer's actual frequency range. This function also allows narrowband and frequency-limited DUTs to be measured with higher accuracy.

5 MHz receiver bandwidth

The R&S®ZVA has a maximum IF bandwidth of 1 MHz as standard. To reduce measurement times even further, the R&S®ZVA-K17 software option offers IF bandwidths up to 5 MHz. This reduces the net sampling time per point to approximately 430 ns. The option not only speeds up measurements in the frequency domain, it also provides improved performance for point-in-pulse and pulse profile measurements on pulses of a few microseconds´ length by means of easy-to-configure standard CW or time sweeps, where the S-parameters or amplitudes of pulses are measured as a function of time.

The R&S®ZVA with external amplifier and harmonic filter

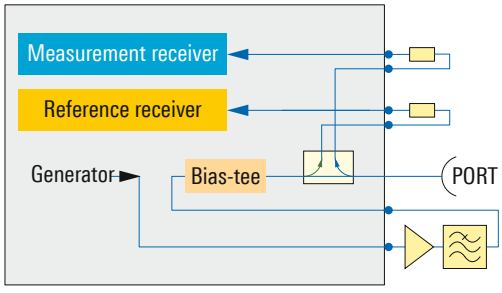

Dialog for time domain measurement configuration.

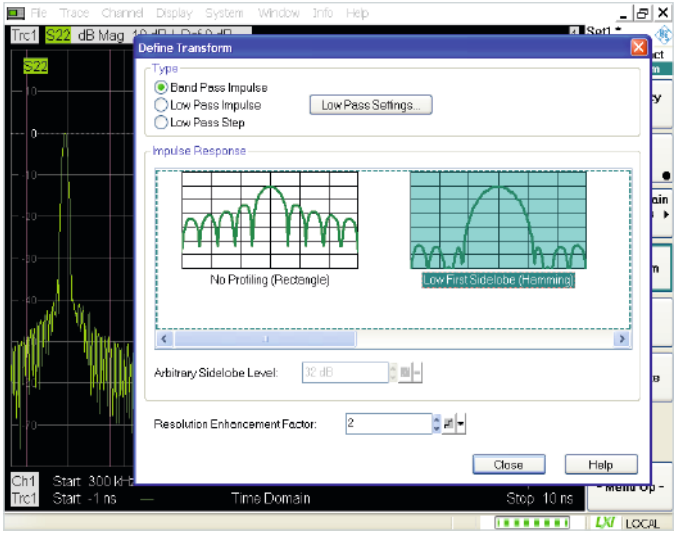

Measurements on active devices made easy

The R&S®ZVAX-TRMxx extension unit (where xx = 24, 40, 50, 67) for the R&S®ZVA simplifies advanced measurements on active devices such as amplifiers, receivers and T/R-modules. The signals from the R&S®ZVA are modified inside the box, and output at the ports of the R&S®ZVAX-TRM unit (ports 1 and 2) or routed back to R&S®ZVA ports 3 and 4. The basic version is ready for high power measurements. Depending on the measurement tasks, it can be configured with combiners, pulse modulators, ouput amplifiers or receiver LNAs. It is directly controlled by the R&S®ZVA via a graphical user interface.

The combination of an R&S®ZVA and the R&S®ZVAX-TRM behaves like a fully integrated single box. However, if multiple R&S®ZVA network analyzers are being used in a lab, they can share the extension unit. This leads to an optimum utilization of investment.

Basic version for high-power measurements and flexible system configuration

The basic model provides high-power couplers for levels up to +43 dBm, and access to the generator and receiver path. Thus even without options, high-power measurements and the insertion of user-provided components such as booster amplifiers and attenuators are supported.

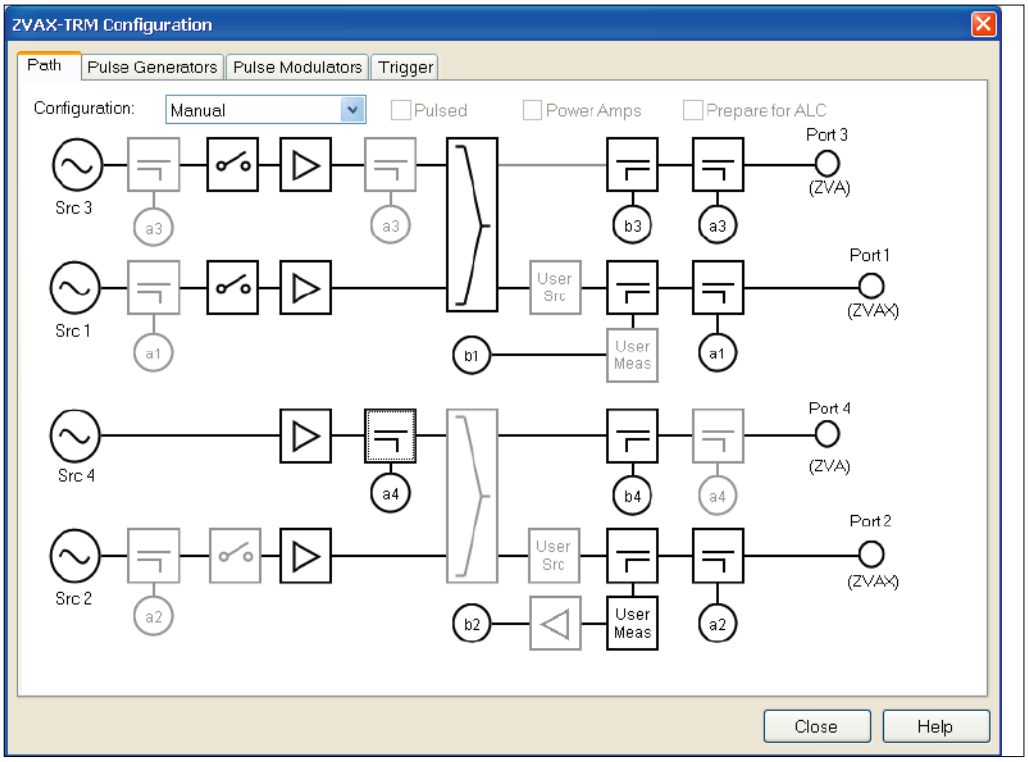

Convenient control via a graphical user interface.

Combiners for fast and accurate IMD measurements

Two combiners make it possible to generate bidirectional two-tone signals, using both sources of a four-port R&S®ZVA or a two-port R&S®ZVA with an external generator. Together with the R&S®ZVA analyzer's intermodulation wizard, it simplifies the setup for measuring the intermodulation parameters versus frequency and power.

Pulse modulators for all pulsed RF applications

Three pulse modulators in the source paths allow bidirectional pulsed measurements on TX/RX modules, amplifiers and mixers. Two pulse generators in the R&S®ZVA control the modulators.

Output amplifier

Amplifiers in all of the R&S®ZVAX-TRM generator paths compensate for the losses of the components inside the extension unit. As a result, even at the ports of the R&S®ZVAX-TRM units a power comparable to the power available from standard vector network analyzer (VNA) ports is provided.

Receiver low-noise preamplifier

Low-noise preamplifiers in the receiver paths of ports 1 and 2 support noise figure measurements with R&S®ZVA-K30/K31.

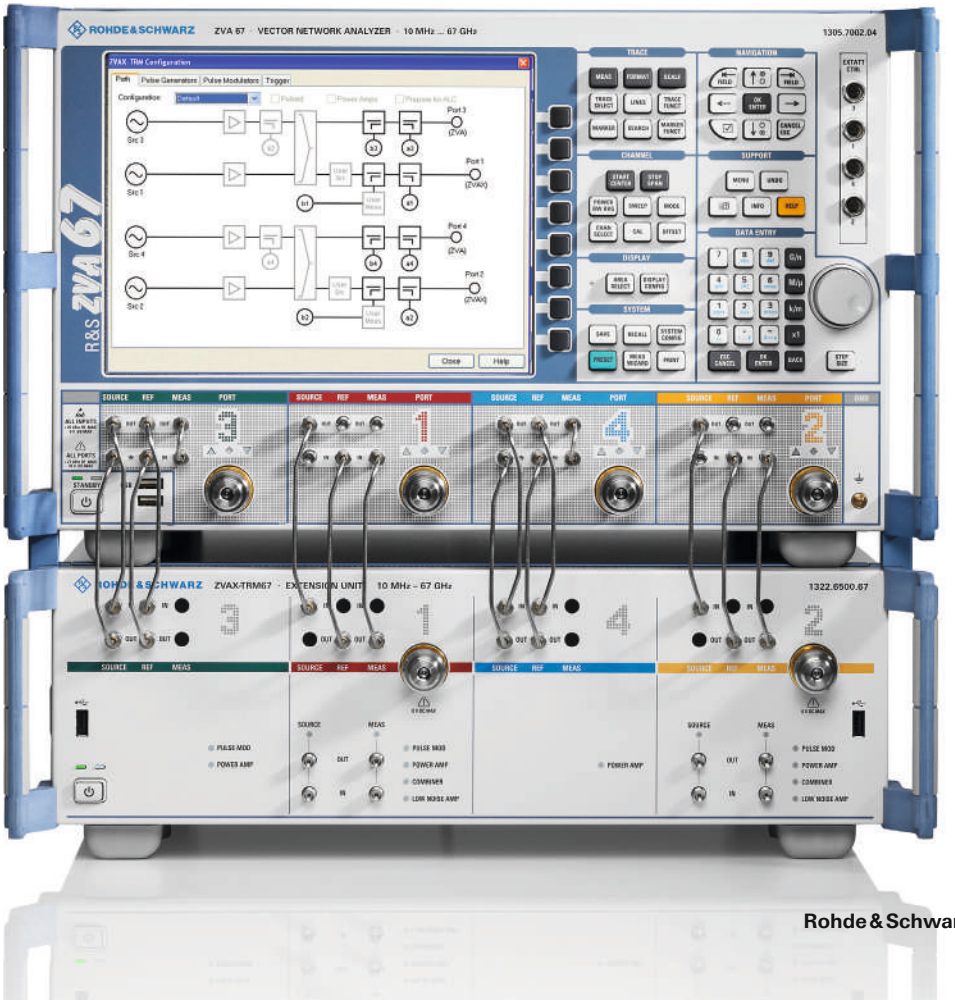

Setup for S-parameter, harmonic, intermodulation and pulsed measurements.

Front view

User-friendly front panel

More than 100 channels and traces
Display of measurement parameters using a variety of stimulus conditions

Control by mouse or hardkeys/softkeys
Convenient user interface with wizards, context menus and extensive analysis functions

Undo/Redo
Cancels the last one to six entries

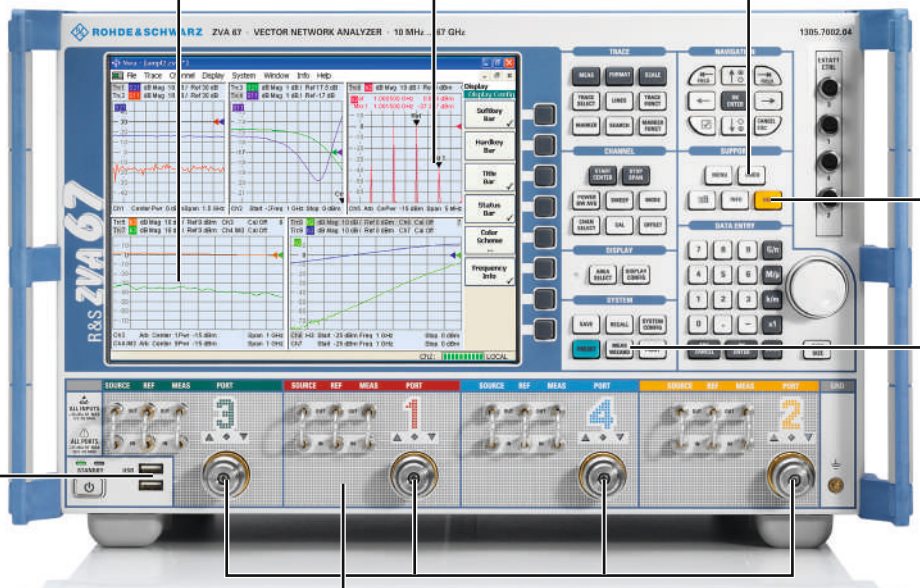

Online help
Context-sensitive including remote control commands

Measurement wizard
Guides you step by step through the test setup you want

USB connectors
- Support of USB storage peripheral devices
- Integration of R&S®NRP test heads for power calibration and power measurement
- Support of automatic calibration with calibration units from Rohde & Schwarz

Up to four independent generators
Simple test configuration, high speed for mixer, intermodulation and true differential measurements

Wide range of connectors and interfaces
- LAN
- IEC/IEEE
- USB
- VGA
- USER CONTROL

(for synchronizing external components, e.g. handlers, with the analyzer's internal measurement sequences)

Direct access to all generator and receiver paths
Enhanced sensitivity and dynamic range for the connection of external test sets, e.g. for high-power applications

Rear view

Interface description

PORT BIAS
DC power input for supply of amplifiers via inner conductor of test port; one input and fuse per RF port; BNC connectors

IEC/IEEE BUS
Remote control of the R&S®ZVA

MONITOR
For external VGA monitor; standard VGA connector

EXT TRIGGER
Input of external TTL trigger signal for starting a sweep, sweep segment, test point or partial measurement; BNC connector

LAN 1
Control of the R&S®ZVA or a subnetwork with the R&S®ZVA as the master; 8-pin RJ-45 connector

LAN 2
Control of the R&S®ZVA or a subnetwork with the R&S®ZVA as the master; 8-pin RJ-45 connector

USB
Standard 1.1 USB double port (for mouse, keyboard, printer, storage media, etc.)

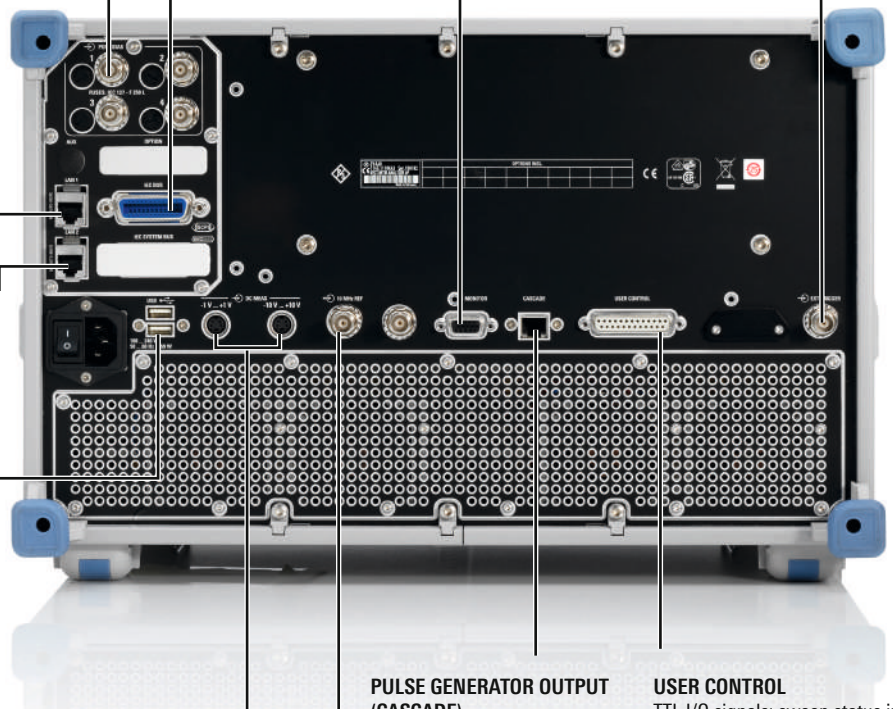

DC MEAS
Measurement inputs for DC voltage and PAE measurements; input voltage ranges ±1 V and ±10 V; mini DIN connectors; required cable: R&S®ZV-Z71 (option)

PULSE GENERATOR OUTPUT (CASCADE)
Output of two pulse generator signals

USER CONTROL
TTL I/O signals: sweep status indication, pass/fail indication, indication of active test port, indication of active channel by channel bits, trigger signals for fast control of external devices, e.g. generators, handshake with handlers, sequence control without programming effort; 25-pin D-Sub connector

10 MHz REF
Reference frequency I/O: 10 MHz reference can be input from or output to external devices; BNC connector

Technologies
Standard functions

Function	Description
Two or four test ports, one generator for each pair of test ports; the four-source models of R&S®ZVA24/40 and the R&S®ZVA67 have one generator per test port	Integrated bidirectional RF test ports; test set configuration depends on analyzer model and is provided as standard in each case
Measured quantities	Complete S-parameter matrix, wave quantities, wave quantity ratios, impedances, admittances, Z- and Y-parameters of multiport DUTs, stability factors
Balanced measurements (standard mode)	Mixed-mode S-parameters, mixed-mode Z- and Y-parameters, impedances and admittances of balanced DUTs
Pulsed measurements	High PRF mode, point-in-pulse, pulse profile measurements with pulse duration of approx. 10 µs to 100 µs and longer, by means of CW or time sweep; use of the R&S®ZVAxx-B16 and R&S®ZVA-K4 options recommended
Calibration techniques	TOSM, TRL/LRL, TOM, TRM, TNA, normalization, one-path two-port; UOSM for calibration with an unknown through connection (includes adapter removal function); automatic calibration (R&S®ZN-Z51/ZV-Z52/-Z53/-Z54)
Power calibration	Enhanced power accuracy; calibration of test sets and preamplifiers; for frequency and power sweeps; requires an external power meter; maximum convenience with R&S®NRP-Zxx power sensors with USB interface
Power measurement and scalar network analysis	R&S®NRP power sensors can be connected directly to the USB ports and are treated like additional test inputs; display of power versus frequency or versus power; enables wideband scalar network analysis
Automatic level control (ALC)	Controls the output power by means of the signal fed to the reference channel; corrects preamplifier drift as well as power uncertainty due to mismatch; provides enhanced power accuracy and linearity
Active test set (PORT BIAS)	Input of DC power for supply of amplifiers via inner conductor of test port; requires external DC power supply
DC inputs	Measurement inputs for DC voltage, enabling PAE measurements
User support for calibration	Calibration manager; performance of selective calibration steps instead of complete recalibration; definition of calibration kits by means of equivalent circuit model or using S-parameters of calibration standards
Large number of diagrams, traces and channels	More than 100 traces and channels can be created and assigned to diagrams as required
Preloading of setups; setup swap	Simultaneous loading of several instrument setups into RAM; fast switchover between instrument setups, manually or by IEC/IEEE bus control
Segmented sweep, lin/log sweep	Optimization of sweeps for important DUT measurement parameters
Power sweep, compression measurements	50 dB power sweep range for compression measurements
CW mode	Sweeps with fixed power and frequency; shortest measurement time less than 3.5 µs per test point; for measuring pulsed components or settling times
Time sweep	Determination of measured quantities as a function of time
60 001 points per trace (100 001 points on request)	High sweep resolution, narrow test point grid
IF bandwidths 1 Hz to 1 MHz	Optimization of measurement speed and dynamic range
Online support functions	Context-sensitive online help; undo function for canceling the last user operations; Windows key for accessing the operating system; complete listing of current instrument setup including calibration
User guidance	Step-by-step guidance to desired instrument setup, including calibration if required (measurement wizard)
Convenient execution of control software	Execution of macros, control and analysis programs at a keystroke
Trace mathematics, equation editor	Functions for online computation of measured data using complex equations, for adjustments and for statistical evaluation (RMS, max. hold, etc.)
Marker functions, trace statistics, limit lines	Ten markers per trace, individually configurable; comprehensive analysis functions and online trace data evaluation; generation of limit lines from traces, data import and export for limit lines
Trigger functions	Triggers for sweeps, sweep segments, test points or partial measurements
Interfaces (2 × LAN, 4 × USB, IEC BUS, MHZ REF, MONITOR, USER CONTROL, DIGITAL INTERFACE, EXT TRIGGER)	Control of the R&S®ZVA; control of external devices or handlers using the R&S®ZVA; fast TTL handler and sequence control; connection of peripherals, e.g. printer or storage media (see also interface description); indication of measurement time
Embedding/deembedding	Inclusion of virtual matching networks, parasitic effects, etc.; correction of the influence of test set components; parameterizable predefined networks and/or import of S-parameter files in order to define (matching) networks
Adapter removal functionality	Enables calibration using different types of connectors in the reference planes, e.g. N to 3.5 mm; this function is possible by applying the UOSM calibration technique, which allows an adapter with unknown parameters to be used as a through connection (“Unknown Through”); O, S and M calibration is required for the different connector types at both ends

Options

Designation	Type	Function
Oven Quartz (OCXO)	R&S®ZVAB-B4	Enhanced frequency accuracy
Time Domain (TDR)	R&S®ZVAB-K2	Location of discontinuities and determination of impedance characteristic versus time/length, reflection and transmission measurements, gating function for eliminating discontinuities, linear prediction function for enhanced resolution
Generator Step Attenuator for Port 1/2/3/4	R&S®ZVA8-B21/22/23/24 R&S®ZVA24-B21/22/23/24 R&S®ZVA40-B21/22/23/24 R&S®ZVA50-B21/22/23/24 R&S®ZVA67-B21/22/23/24	Generator step attenuators 70 dB in steps of 10 dB; P_{min} = < –100 dBm (R&S®ZVA8, R&S®ZVA24, R&S®ZVA40) 50 dB in steps of 10 dB; P_{min} = < –80 dBm (R&S®ZVA50, R&S®ZVA67)
Receiver Step Attenuator for Port 1/2/3/4	R&S®ZVA8-B31/32/33/34 R&S®ZVA24-B31/32/33/34 R&S®ZVA40-B31/32/33/34 R&S®ZVA50-B31/32/33/34 R&S®ZVA67-B31/32/33/34	Receiver step attenuators 35 dB in steps of 5 dB; P_{max} = 27 dBm
Direct Generator/Receiver Access	R&S®ZVAxx-B16	Direct access to the R&S®ZVA internal generators and receivers for all ports of the analyzer (internal couplers are bypassed)
Frequency Conversion	R&S®ZVA-K4	Measurements on frequency-converting DUTs: conversion gain, harmonics, hot S_{22} and intermodulation measurements on mixers and amplifiers; requires R&S®ZVAB-B44 or VISA I/O BIB to control external generators
Vector Corrected Mixer Measurements	R&S®ZVA-K5	Measurement of absolute phase and group delay of mixers with access to the LO; requires R&S®ZVA-B16 and R&S®ZVA-K4
Embedded LO Mixer Delay Measurements	R&S®ZVA-K9	Measurement of group delay and relative phase of frequency converters without access to the internal LO; requires R&S®ZVA four-port model, R&S®ZVA-K4 and R&S®ZVA-B16
Cable Set for R&S®ZVA-K9	R&S®ZVA-B9	Set of cables for the R&S®ZVA-K9 to use the internal coupler of R&S®ZVA to generate the two-tone signal
5 MHz Receiver Bandwidth	R&S®ZVA-K17	Offers up to 5 MHz IF bandwidth, thus providing shorter measurement times for frequency, time and CW sweeps; enhanced performance for point-in-pulse measurements
Pulsed Measurements	R&S®ZVA-K7	Enables pulse profile measurements: up to 3 ms recording of pulse profile versus time with 12.5 ns resolution; measurement of magnitude and phase of S-parameters; offers up to 30 MHz IF bandwidth; includes R&S®ZVA-K17
Pulsed Measurements	R&S®ZVA-B7	Enables pulse profile measurements: up to 25 ms recording of pulse profile versus time with 12.5 ns resolution; includes R&S®ZVA-K7
Internal Pulse Generators	R&S®ZVA-K27	Two pulse generators, e.g. for controlling the pulse modulators of the R&S®ZVAX-TRM; generation of single pulses, double pulses and pulse trains
True Differential Measurements	R&S®ZVA-K6	Stimulation of balanced devices using true 0° and 180° phase-locked differential signals supplied by the two internal generators of the R&S®ZVA four-port model; measures mixed-mode S-parameters, phase, etc.; supports –180° to +180° true phase and amplitude imbalance sweeps of the stimulus signals
USB-to-IEC/IEEE Adapter	R&S®ZVAB-B44	Adapter and driver software for controlling external generators with the R&S®ZVA via the GPIB interface; required, for example, for use with the R&S®ZVA-K4
National Instruments VISA I/O Library	VISA I/O BIB	Software library for controlling external generators with the R&S®ZVA via the LAN interface; required, for example, for use with the R&S®ZVA-K4
External Attenuator Control	R&S®ZVA-B8	Control of the electronic attenuators of an R&S®ZV-Z90/110E converter, e.g. for accurate power leveling after power calibration or for performing power sweeps
Converter Control Software	R&S®ZVA-K8	Includes R&S®ZVA-K4
Converter 50 GHz to 75 GHz 60 GHz to 90 GHz 75 GHz to 110 GHz 90 GHz to 140 GHz 110 GHz to 170 GHz 140 GHz to 220 GHz 220 GHz to 325/330 GHz 325 GHz to 500 GHz	 R&S®ZVA-Z75 R&S®ZVA-Z90 R&S®ZVA-Z110/E R&S®ZVA-Z140 R&S®ZVA-Z170 R&S®ZVA-Z220 R&S®ZVA-Z325 R&S®ZVA-Z500	Converts the frequency range of an R&S®ZVA24, R&S®ZVA40, R&S®ZVA50 or R&S®ZVA67 vector network analyzer to frequency ranges up to 500 GHz; one or more external converters may be required; bidirectional measurements on two-port DUTs, for example, require two converters Additional requirements: cable sets, waveguide calibration kits, R&S®ZVA-K8 converter control software (for details, see the R&S®ZVA-Zxx data sheet)
Extension Unit	R&S®ZVAX-TRM 24/40/50/67	External box that can be equipped with options such as combiner, pulse modulators, preamplifiers and high-power couplers to perform harmonic, intermodulation, high-power and pulsed measurements with the R&S®ZVA
Noise Figure Measurements	R&S®ZVAB-K30	Measures the noise figure of an amplifier simultaneously with its S-parameters or any other quantities without reconnecting the DUT; requires a power meter for calibration, e.g. the R&S®NRP
Frequency Converting Noise Figure Measurements	R&S®ZVA-K31	Measures the noise figure of frequency converting devices; requires options R&S®ZVA-K4 and R&S®ZVAB-K30
Universal Interface	R&S®ZVAB-B14	I/O port for handler, digital I/Os (necessary for remote control)
Group Delay (internal LO)	R&S®ZVA-K10	Measurement of group delay of frequency converters without LO access for long distances using two R&S®ZVA or R&S®ZVT; requires R&S®ZVA-B16, R&S®ZVA-K4, R&S®ZVA-K9

Ordering information

Designation	Type	Frequency range	Order No.
Base units [1]			
Vector Network Analyzer, Two Ports, 8 GHz, N	R&S®ZVA8	300 kHz to 8 GHz	1145.1110.08
Vector Network Analyzer, Four Ports, 8 GHz, N	R&S®ZVA8	300 kHz to 8 GHz	1145.1110.10
Vector Network Analyzer, Two Ports, 24 GHz, 3.5 mm	R&S®ZVA24	10 MHz to 24 GHz	1145.1110.24
Vector Network Analyzer, Four Ports, 24 GHz, 3.5 mm	R&S®ZVA24	10 MHz to 24 GHz	1145.1110.26
Vector Network Analyzer, Four Ports, Four Sources, 24 GHz, 3.5 mm	R&S®ZVA24	10 MHz to 24 GHz	1145.1110.28
Vector Network Analyzer, Two Ports, 40 GHz, 2.4 mm	R&S®ZVA40	10 MHz to 40 GHz	1145.1110.43
Vector Network Analyzer, Two Ports, 40 GHz, 2.92 mm	R&S®ZVA40	10 MHz to 40 GHz	1145.1110.40
Vector Network Analyzer, Four Ports, 40 GHz, 2.4 mm	R&S®ZVA40	10 MHz to 40 GHz	1145.1110.45
Vector Network Analyzer, Four Ports, 40 GHz, 2.92 mm	R&S®ZVA40	10 MHz to 40 GHz	1145.1110.42
Vector Network Analyzer, Four Ports, Four Sources, 40 GHz, 2.92 mm	R&S®ZVA40	10 MHz to 40 GHz	1145.1110.48
Vector Network Analyzer, Two Ports, 50 GHz, 2.4 mm	R&S®ZVA50	10 MHz to 50 GHz	1145.1110.50
Vector Network Analyzer, Four Ports, 50 GHz, 2.4 mm	R&S®ZVA50	10 MHz to 50 GHz	1145.1110.52
Vector Network Analyzer, Two Ports, 67 GHz, 1.85 mm	R&S®ZVA67	10 MHz to 67 GHz	1305.7002.02
Vector Network Analyzer, Four Ports, 67 GHz, 1.85 mm	R&S®ZVA67	10 MHz to 67 GHz	1305.7002.04
Vector Network Analyzer, Two Ports, 110 GHz, 1 mm [2]	R&S®ZVA110	10 MHz to 110 GHz	1312.7004.03
Vector Network Analyzer, Two Ports, 110 GHz, 1 mm, without cables [2]	R&S®ZVA110	10 MHz to 110 GHz	1312.7004.05
Options			
Direct Generator/Receiver Access, Two-Port Model, 8 GHz	R&S®ZVA8-B16	300 kHz to 8 GHz	1164.0209.08
Direct Generator/Receiver Access, Four-Port Model, 8 GHz	R&S®ZVA8-B16	300 kHz to 8 GHz	1164.0209.10
Direct Generator/Receiver Access, Two-Port Model, 24 GHz	R&S®ZVA24-B16	10 MHz to 24 GHz	1164.0209.24
Direct Generator/Receiver Access, Four-Port Model, 24 GHz	R&S®ZVA24-B16	10 MHz to 24 GHz	1164.0209.26
Direct Generator/Receiver Access, Two-Port Model, 40 GHz	R&S®ZVA40-B16	10 MHz to 40 GHz	1164.0209.40
Direct Generator/Receiver Access, Four-Port Model, 40 GHz	R&S®ZVA40-B16	10 MHz to 40 GHz	1164.0209.42
Direct Generator/Receiver Access, Two-Port Model, 50 GHz	R&S®ZVA50-B16	10 MHz to 50 GHz	1164.0209.50
Direct Generator/Receiver Access, Four-Port Model, 50 GHz	R&S®ZVA50-B16	10 MHz to 50 GHz	1164.0209.52
Direct Generator/Receiver Access, Two-Port Model, 67 GHz	R&S®ZVA67-B16	10 MHz to 67 GHz	1164.0209.67
Direct Generator/Receiver Access, Four-Port Model, 67 GHz	R&S®ZVA67-B16	10 MHz to 67 GHz	1164.0209.69
Generator Step Attenuator, Port 1, for R&S®ZVA8	R&S®ZVA8-B21	300 kHz to 8 GHz	1164.0009.02
Generator Step Attenuator, Port 2, for R&S®ZVA8	R&S®ZVA8-B22	300 kHz to 8 GHz	1164.0015.02
Generator Step Attenuator, Port 3, for R&S®ZVA8	R&S®ZVA8-B23	300 kHz to 8 GHz	1164.0021.02
Generator Step Attenuator, Port 4, for R&S®ZVA8	R&S®ZVA8-B24	300 kHz to 8 GHz	1164.0038.02
Generator Step Attenuator, Port 1, for R&S®ZVA24	R&S®ZVA24-B21	10 MHz to 24 GHz	1164.0109.02
Generator Step Attenuator, Port 2, for R&S®ZVA24	R&S®ZVA24-B22	10 MHz to 24 GHz	1164.0115.02
Generator Step Attenuator, Port 3, for R&S®ZVA24	R&S®ZVA24-B23	10 MHz to 24 GHz	1164.0121.02
Generator Step Attenuator, Port 4, for R&S®ZVA24	R&S®ZVA24-B24	10 MHz to 24 GHz	1164.0138.02
Generator Step Attenuator, Port 1, for R&S®ZVA40	R&S®ZVA40-B21	10 MHz to 40 GHz	1302.5409.02
Generator Step Attenuator, Port 2, for R&S®ZVA40	R&S®ZVA40-B22	10 MHz to 40 GHz	1302.5415.02
Generator Step Attenuator, Port 3, for R&S®ZVA40	R&S®ZVA40-B23	10 MHz to 40 GHz	1302.5421.02
Generator Step Attenuator, Port 4, for R&S®ZVA40	R&S®ZVA40-B24	10 MHz to 40 GHz	1302.5438.02
Generator Step Attenuator, Port 1, for R&S®ZVA50	R&S®ZVA50-B21	10 MHz to 50 GHz	1305.5616.02
Generator Step Attenuator, Port 2, for R&S®ZVA50	R&S®ZVA50-B22	10 MHz to 50 GHz	1305.5622.02
Generator Step Attenuator, Port 3, for R&S®ZVA50	R&S®ZVA50-B23	10 MHz to 50 GHz	1305.5639.02
Generator Step Attenuator, Port 4, for R&S®ZVA50	R&S®ZVA50-B24	10 MHz to 50 GHz	1305.5645.02
Generator Step Attenuator, Port 1, for R&S®ZVA67	R&S®ZVA67-B21	10 MHz to 67 GHz	1305.7077.02
Generator Step Attenuator, Port 2, for R&S®ZVA67	R&S®ZVA67-B22	10 MHz to 67 GHz	1305.7083.02
Generator Step Attenuator, Port 3, for R&S®ZVA67	R&S®ZVA67-B23	10 MHz to 67 GHz	1305.7090.02
Generator Step Attenuator, Port 4, for R&S®ZVA67	R&S®ZVA67-B24	10 MHz to 67 GHz	1305.7102.02

Designation	Type	Frequency range	Order No.
Receiver Step Attenuator, Port 1, for R&S®ZVA8	R&S®ZVA8-B31	300 kHz to 8 GHz	1164.0044.02
Receiver Step Attenuator, Port 2, for R&S®ZVA8	R&S®ZVA8-B32	300 kHz to 8 GHz	1164.0050.02
Receiver Step Attenuator, Port 3, for R&S®ZVA8	R&S®ZVA8-B33	300 kHz to 8 GHz	1164.0067.02
Receiver Step Attenuator, Port 4, for R&S®ZVA8	R&S®ZVA8-B34	300 kHz to 8 GHz	1164.0073.02
Receiver Step Attenuator, Port 1, for R&S®ZVA24	R&S®ZVA24-B31	10 MHz to 24 GHz	1164.0144.02
Receiver Step Attenuator, Port 2, for R&S®ZVA24	R&S®ZVA24-B32	10 MHz to 24 GHz	1164.0150.02
Receiver Step Attenuator, Port 3, for R&S®ZVA24	R&S®ZVA24-B33	10 MHz to 24 GHz	1164.0167.02
Receiver Step Attenuator, Port 4, for R&S®ZVA24	R&S®ZVA24-B34	10 MHz to 24 GHz	1164.0173.02
Receiver Step Attenuator, Port 1, for R&S®ZVA40	R&S®ZVA40-B31	10 MHz to 40 GHz	1302.5444.02
Receiver Step Attenuator, Port 2, for R&S®ZVA40	R&S®ZVA40-B32	10 MHz to 40 GHz	1302.5450.02
Receiver Step Attenuator, Port 3, for R&S®ZVA40	R&S®ZVA40-B33	10 MHz to 40 GHz	1302.5467.02
Receiver Step Attenuator, Port 4, for R&S®ZVA40	R&S®ZVA40-B34	10 MHz to 40 GHz	1302.5473.02
Receiver Step Attenuator, Port 1, for R&S®ZVA50	R&S®ZVA50-B31	10 MHz to 50 GHz	1305.5716.02
Receiver Step Attenuator, Port 2, for R&S®ZVA50	R&S®ZVA50-B32	10 MHz to 50 GHz	1305.5722.02
Receiver Step Attenuator, Port 3, for R&S®ZVA50	R&S®ZVA50-B33	10 MHz to 50 GHz	1305.5739.02
Receiver Step Attenuator, Port 4, for R&S®ZVA50	R&S®ZVA50-B34	10 MHz to 50 GHz	1305.5745.02
Receiver Step Attenuator, Port 1, for R&S®ZVA67	R&S®ZVA67-B31	10 MHz to 67 GHz	1305.7119.02
Receiver Step Attenuator, Port 2, for R&S®ZVA67	R&S®ZVA67-B32	10 MHz to 67 GHz	1305.7125.02
Receiver Step Attenuator, Port 3, for R&S®ZVA67	R&S®ZVA67-B33	10 MHz to 67 GHz	1305.7131.02
Receiver Step Attenuator, Port 4, for R&S®ZVA67	R&S®ZVA67-B34	10 MHz to 67 GHz	1305.7148.02
Converter WR15 (one unit)[3]	R&S®ZVA-Z75	50 GHz to 75 GHz	1307.7400.02
Converter WR12 (one unit)[3, 4]	R&S®ZVA-Z90	60 GHz to 90 GHz	1322.3024.02
Converter WR10 (one unit)[3]	R&S®ZVA-Z110	75 GHz to 110 GHz	1307.7000.03
Converter WR10 (one unit)[3, 4]	R&S®ZVA-Z110E	75 GHz to 110 GHz	1307.7000.40
Converter WR08 (one unit)[3]	R&S®ZVA-Z140	90 GHz to 140 GHz	1307.7800.02
Converter WR06 (one unit)[3]	R&S®ZVA-Z170	110 GHz to 170 GHz	1311.8707.02
Converter WR05 (one unit)[3]	R&S®ZVA-Z220	140 GHz to 220 GHz	1307.8006.02
Converter WR03 (one unit)[3]	R&S®ZVA-Z325	220 GHz to 325 GHz	1317.0514.02
Converter WR02 (one unit)[3]	R&S®ZVA-Z500	325 GHz to 500 GHz	1317.0520.02
Converter WM1295 (one unit)	R&S®ZC220	140 GHz to 220 GHz	1323.7646.02
Converter WM864 (one unit)	R&S®ZC330	220 GHz to 330 GHz	1323.7669.02
Converter WM570 (one unit)	R&S®ZC500	330 GHz to 500 GHz	1323.7681.02
Converter Control Software[5]	R&S®ZVA-K8		1307.7022.02
External Attenuator Control[6]	R&S®ZVA-B8		1307.6026.02
Oven Quartz (OCXO)	R&S®ZVAB-B4		1164.1757.02
Time Domain (TDR)	R&S®ZVAB-K2		1164.1657.02
Noise Figure Measurements[7]	R&S®ZVAB-K30		1164.1828.02
Frequency Converting Noise Figure Measurements[7]	R&S®ZVA-K31		1317.8938.02
Frequency Conversion Measurements[8]	R&S®ZVA-K4		1164.1863.02
Vector Corrected Mixer Measurements[9]	R&S®ZVA-K5		1311.3134.02
Embedded LO Mixer Delay Measurements[10]	R&S®ZVA-K9		1311.3128.02
Pulsed Measurements, 3 ms recording time, for all R&S®ZVA[11]	R&S®ZVA-K7		1164.1511.02
Pulsed Measurements, 25 ms recording time, for all two-port R&S®ZVA[11]	R&S®ZVA-B7		1164.1492.02
Pulsed Measurements, 25 ms recording time, for all four-port R&S®ZVA[11]	R&S®ZVA-B7		1164.1492.03
Cable Set for R&S®ZVA-K9	R&S®ZVA-B9		1305.6541.0x[12]
Internal Pulse Generators	R&S®ZVA-K27		1164.1892.02
5 MHz Receiver Bandwidth	R&S®ZVA-K17		1164.1070.02
True Differential Measurements[13]	R&S®ZVA-K6		1164.1540.02
USB-to-IEC/IEEE Adapter	R&S®ZVAB-B44		1302.5544.02
National Instruments VISA I/O Library	VISA I/O BIB		1310.0054.02
Universal Interface (I/O port for handler, digital I/Os)	R&S®ZVAB-B14		1305.6306.02
Group Delay (frequency converters with internal LO)[14]	R&S®ZVA-K10		1164.1805.02

Designation	Type	Frequency range	Order No.
Extras			
Calibration kits			
Calibration Kit, N (m), 50 Ω	R&S®ZV-Z170	0 Hz to 9 GHz	1317.7683.02
Calibration Kit, N (f), 50 Ω	R&S®ZV-Z170	0 Hz to 9 GHz	1317.7683.03
Calibration Kit, 3.5 mm (m), 50 Ω	R&S®ZV-Z135	0 Hz to 15 GHz	1317.7677.02
Calibration Kit, 3.5 mm (f), 50 Ω	R&S®ZV-Z135	0 Hz to 15 GHz	1317.7677.03
Calibration Kit, 2.92 mm (m), 50 Ω	R&S®ZV-Z129	0 Hz to 40 GHz	1322.7471.02
Calibration Kit, 2.92 mm (f), 50 Ω	R&S®ZV-Z129	0 Hz to 40 GHz	1322.7471.03
Calibration Kit, N, 50 Ω	R&S®ZCAN	0 Hz to 3 GHz	0800.8515.52
Calibration Kit, N, 50 Ω	R&S®ZV-Z270	0 Hz to 18 GHz	5011.6536.02
Calibration Kit, 3.5 mm	R&S®ZV-Z235	0 Hz to 26.5 GHz	5011.6542.02
Calibration Kit, 2.92 mm	R&S®ZV-Z229	0 Hz to 40 GHz	5011.6559.02
Calibration Kit, 2.4 mm	R&S®ZV-Z224	0 Hz to 50 GHz	5011.6565.02
Calibration Kit, 1.85 mm	R&S®ZV-Z218	0 Hz to 67 GHz	5011.6571.02
Calibration Kit, 1 mm	R&S®ZV-Z210	0 Hz to 110 GHz	5011.6588.02
Waveguide Calibration Kit WR15 (without sliding match)	R&S®ZV-WR15	50 GHz to 75 GHz	1307.7500.30
Waveguide Calibration Kit WR15 (with sliding match)	R&S®ZV-WR15	50 GHz to 75 GHz	1307.7500.31
Waveguide Calibration Kit WR12 (without sliding match)	R&S®ZV-WR12	60 GHz to 90 GHz	1307.7700.10
Waveguide Calibration Kit WR12 (with sliding match)	R&S®ZV-WR12	60 GHz to 90 GHz	1307.7700.11
Waveguide Calibration Kit WR10 (without sliding match)	R&S®ZV-WR10	75 GHz to 110 GHz	1307.7100.10
Waveguide Calibration Kit WR10 (with sliding match)	R&S®ZV-WR10	75 GHz to 110 GHz	1307.7100.11
Waveguide Calibration Kit WR08 (without sliding match)	R&S®ZV-WR08	90 GHz to 140 GHz	1307.7900.10
Waveguide Calibration Kit WR08 (with sliding match)	R&S®ZV-WR08	90 GHz to 140 GHz	1307.7900.11
Waveguide Calibration Kit WR06 (without sliding match)	R&S®ZV-WR06	110 GHz to 170 GHz	1311.8807.10
Waveguide Calibration Kit WR06 (with sliding match)	R&S®ZV-WR06	110 GHz to 170 GHz	1311.8807.11
Waveguide Calibration Kit WR05 (without sliding match)	R&S®ZV-WR05	140 GHz to 220 GHz	1307.8106.10
Waveguide Calibration Kit WR05 (with sliding match)	R&S®ZV-WR05	140 GHz to 220 GHz	1307.8106.11
Waveguide Calibration Kit WR03 (without sliding match)	R&S®ZV-WR03	220 GHz to 325 GHz	1307.7300.30
Waveguide Calibration Kit WR03 (with sliding match)	R&S®ZV-WR03	220 GHz to 325 GHz	1307.7300.31
Waveguide Calibration Kit WR02 (without sliding match)	R&S®ZV-WR02	325 GHz to 500 GHz	1314.5550.10
Calibration Unit, Two Ports, 3.5 mm (f)	R&S®ZN-Z50	9 kHz to 9 GHz	1335.6904.30
Calibration Unit, Two Ports, 3.5 mm (f)	R&S®ZN-Z50	9 kHz to 26.5 GHz	1335.6904.30
Calibration Unit, Two Ports, 3.5 mm (f)	R&S®ZN-Z51 [15)]	100 kHz to 8.5 GHz	1319.5507.32
Calibration Unit, Two Ports, N (f)	R&S®ZN-Z51 [15)]	100 kHz to 8.5 GHz	1319.5507.72
Calibration Unit, Four Ports, 3.5 mm (f)	R&S®ZN-Z51 [15)]	100 kHz to 8.5 GHz	1319.5507.34
Calibration Unit, Four Ports, N (f)	R&S®ZN-Z51 [15)]	100 kHz to 8.5 GHz	1319.5507.74
Calibration Unit, Four Ports, 3.5 mm (f)	R&S®ZN-Z52	100 kHz to 26.5 GHz	1335.6991.30
Calibration Unit, Two Ports, 3.5 mm (f)	R&S®ZN-Z53	100 kHz to 26.5 GHz	1335.7046.32
Calibration Unit, Two Ports, N (f)	R&S®ZN-Z53	100 kHz to 18 GHz	1335.7046.72
Calibration Unit, Two Ports, 2.92 mm (f)	R&S®ZN-Z54	9 kHz to 40 GHz	1335.7117.92
Calibration Unit, Two Ports, 2.4 mm (f)	R&S®ZN-Z55	9 kHz to 50 GHz	1335.7181.42
Calibration Unit, Two Ports, 1.85 mm (f)	R&S®ZN-ZN156	5 GHz to 67 GHz	1332.7239.72

Designation	Type	Frequency range	Order No.
Verification kits			
T-Check Verification Device, N (f to m)	R&S®ZV-Z370	45 MHz to 18 GHz	1319.1001.02
T-Check Verification Device, 3.5 mm (f to m)	R&S®ZV-Z335	45 MHz to 26.5 GHz	1319.1018.02
T-Check Verification Device, 2.92 mm (f to m)	R&S®ZV-Z329	45 MHz to 40 GHz	1319.1024.02
T-Check Verification Device, 2.4 mm (f to m)	R&S®ZV-Z324	45 MHz to 50 GHz	1319.1030.02
Verification Kit, N	R&S®ZV-Z470	45 MHz to 18 GHz	1319.1053.02
Verification Kit, 3.5 mm	R&S®ZV-Z435	45 MHz to 26.5 GHz	1319.1060.02
Verification Kit, 2.92 mm	R&S®ZV-Z429	45 MHz to 40 GHz	1319.1076.02
Verification Kit, 2.4 mm	R&S®ZV-Z424	45 MHz to 50 GHz	1319.1082.02
Extension Units (xx = 24/40/50/67)			
Unit for installation of R&S®ZVAXxxBxxx options, to extend the measurement capabilities of an R&S®ZVA/R&S®ZVT with B16 option	R&S®ZVAX-TRMxx	10 MHz to 24/40/50/67 GHz	1322.6500.xx
Pulse modulators for R&S®ZVAX-TRM24, to generate pulsed signals at R&S®ZVAX-TRM24 port 1 and port 2	R&S®ZVAXxxB712	10 MHz to 24/40/50/67 GHz	1322.6969.xx
Pulse modulator for R&S®ZVAX-TRM24, to generate pulsed signals at VNA port 3 or R&S®ZVAX-TRM24 port 1 (option B213)	R&S®ZVAXxxB73	10 MHz to 24/40/50/67 GHz	1322.6975.xx
Output amplifiers for R&S®ZVAX-TRM24, for increased output power at R&S®ZVAX-TRM24 port 1 and port 2	R&S®ZVAXxxB112	10 MHz to 24/40/50/67 GHz	1322.6981.xx
Output amplifiers for R&S®ZVAX-TRM24, for increased output power at VNA port 3 and port 4 or R&S®ZVAX-TRM24 ports 1, 2 (option B213/224)	R&S®ZVAXxxB134	10 MHz to 24/40/50/67 GHz	1322.6998.xx
Combiner for R&S®ZVAX-TRM24, two-tone-signal at R&S®ZVAX-TRM port 1 (src 1+3)	R&S®ZVAXxxB213	10 MHz to 24/40/50/67 GHz	1322.7007.xx
Combiner for R&S®ZVAX-TRM24, two-tone-signal at R&S®ZVAX-TRM port 2 (src 2+4)	R&S®ZVAXxxB224	10 MHz to 24/40/50/67 GHz	1322.7013.xx
Low-noise preamplifier for R&S®ZVAX-TRMxx, measurement path port 1	R&S®ZVAXxxB31	10 MHz to 24/40/50 GHz	1322.7020.xx
Low-noise preamplifier for R&S®ZVAX-TRMxx, measurement path port 2	R&S®ZVAXxxB32	10 MHz to 24/40/50 GHz	1322.7036.xx
Test Cables [18]			
N (m)/N (m), 50 Ω, length 0.6 m/1 m	R&S®ZV-Z91	0 Hz to 18 GHz	1301.7572.25/38
N (m)/3.5 mm (m), 50 Ω, length 0.6 m/1 m	R&S®ZV-Z92	0 Hz to 18 GHz	1301.7589.25/38
3.5 mm (f)/3.5 mm (m), length 0.6 m/1 m	R&S®ZV-Z93	0 Hz to 26.5 GHz	1301.7595.25/38
2.92 mm (f)/2.92 mm (m), length 0.6 m/1 m	R&S®ZV-Z95	0 Hz to 40 GHz	1301.7608.25/38
2.4 mm (f)/2.4 mm (m), length 0.6 m	R&S®ZV-Z97	0 Hz to 50 GHz	1301.7637.25
1.85 mm (f)/1.85 mm (m), length 0.6 m	R&S®ZV-Z96	0 Hz to 67 GHz	1301.7614.25
N (m)/N (m), 50 Ω, length 0.6 m/0.9 m	R&S®ZV-Z191	0 Hz to 18 GHz	1306.4507.24/36
N (m)/3.5 mm (m), 50 Ω, length 0.6 m/0.9 m	R&S®ZV-Z192	0 Hz to 18 GHz	1306.4513.24/36
3.5 mm (f)/3.5 mm (m), length 0.6 m/0.9 m/1.5 m	R&S®ZV-Z193	0 Hz to 26.5 GHz	1306.4520.24/36/60
2.92 mm (f)/2.92 mm (m), length 0.6 m/0.9 m	R&S®ZV-Z195	0 Hz to 40 GHz	1306.4536.24/36
1.85 mm (f)/1.85 mm (m), length 0.6 m/0.9 m	R&S®ZV-Z196	0 Hz to 67 GHz	1306.4559.24/36
1.0 mm (f)/1.0 mm (m), length 0.16 m	R&S®ZV-Z198	0 Hz to 110 GHz	1306.4565.06
Sliding Matches			
N (m), 50 Ω	R&S®ZV-Z41	1.7 GHz to 18 GHz	1085.8095.02
N (f), 50 Ω	R&S®ZV-Z41	1.7 GHz to 18 GHz	1085.8095.03
3.5 mm (m/f pair)	R&S®ZV-Z42	2 GHz to 26.5 GHz	1128.3524.02
2.92 mm (m/f pair)	R&S®ZV-Z44	4 GHz to 40 GHz	1128.3553.02

Designation	Type	Frequency range	Order No.
Hardware and measurement add-ons			
Cable for DC Input	R&S®ZV-Z71		1164.1005.02
19" Rack Adapter	R&S®ZZA-611		1096.3302.00
Removable Flash Disk, 4 Gbyte (for R&S®FMR7/3, R&S®FMR7/6) [18]	R&S®ZVAB-B18		1164.0715.03
Removable Hard Disk, 500 Gbyte (for R&S®FMR7/3, R&S®FMR7/6, R&S®FMR9, R&S®FMR11) [18]	R&S®ZVAB-B18		1164.0715.04
Additional removable hard disk, 500 Gbyte			
for R&S®FMR7/3, R&S®FMR7/6	R&S®ZVAB-B19		1164.1111.04
for R&S®FMR9	R&S®ZVAB-B19		1164.1111.05
for R&S®FMR11	R&S®ZVAB-B19		1164.1111.06
Upgrade CPU board to R&S®FMR11, including upgrade to Windows Embedded Standard 7			
for R&S®FMR6	R&S®ZVA-U116		1312.7733.03
for R&S®FMR7	R&S®ZVA-U116		1312.7733.02
for R&S®FMR9	R&S®ZVA-U116		1312.7733.05
Two-Way Wilkinson Power Divider	R&S®ZV-Z1227	4 GHz to 27 GHz	1307.0886.02
Adapter 1.85 mm (f) to 2.92 mm (m)	R&S®ZV-Z1829		1307.8212.00
Adapter 2.92 mm (f) to 1.85 mm (m)	R&S®ZV-Z2918		1307.8229.00
Adapter Angle SMA (m) to SMA (m)	R&S®ZV-Z1118		1314.5373.00
Adapter Angle SMA (m) to SMA (f)	R&S®ZV-Z1218		1314.5380.00
Upgrade for R&S®ZVA24 models .26 to .28, four sources	R&S®ZVA24-U5		1312.7710.28
Upgrade for R&S®ZVA40 models .42 to .48, four sources	R&S®ZVA40-U5		1312.7710.48
Manual (in printed form)			1145.1084.12

[1] Operating manual on CD ROM and quick start guide supplied with the R&S®ZVA.
[2] The R&S®ZVA110 can be equipped with the following options: R&S®ZVAB-K2, R&S®ZVA-K5, R&S®ZVA-K7/-B7, R&S®ZVA-K17/-K27, R&S®ZVAB-B4, R&S®ZVA-B18/-B19.
[3] Requires R&S®ZVA-K8. In case an external generator is used for the LO signal, the R&S®ZVAB-B44 option is required for controlling external generators via GPIB; the VISA I/O BIB option is required for controlling external generators via LAN.
[4] Requires R&S®ZVA-B8.
[5] Includes R&S®ZVA-K4.
[6] Control unit, installed in floppy drive slot. Required once per VNA.
[7] A suitable preamplifier and highpass filter, depending on the R&S®ZVA model and frequency range might be necessary. Includes the R&S®ZVA-K17 option, 5 MHz measurement bandwidth. For R&S®ZVA67 noise figure measurement only > 1.5 GHz.
[8] The R&S®ZVAB-B44 option is required for controlling external generators via GPIB; the VISA I/O BIB option is required for controlling external generators via LAN.
[9] Requires R&S®ZVA-B16 and R&S®ZVA-K4.
[10] Requires R&S®ZVA four-port model, R&S®ZVA-B16 and R&S®ZVA-K4; R&S®ZVA-K5 and R&S®ZVA-B9 recommended.
[11] R&S®ZVA-B16 recommended. Includes R&S®ZVA-K17.
[12] x = 2 for R&S®ZVA8, x = 3 for R&S®ZVA24 and R&S®ZVA40 2.92 mm, x = 4 for R&S®ZVA50 and R&S®ZVA67.
[13] Requires R&S®ZVA four-port model.
[14] Requires VISA I/O BIB.
[15] Test port type configurable as option. Combination of 3.5 mm, N, 7/16 is possible
[16] Requires R&S®ZVA-B16.
[17] One cable.
[18] All R&S®ZVA analyzers are equipped as standard with an R&S®FMR11 control unit.

Warranty		
Base unit		3 years
All other items [1]		1 year
Options		
Extended Warranty, one year	R&S®WE1	Please contact your local Rohde & Schwarz sales office.
Extended Warranty, two years	R&S®WE2	
Extended Warranty with Calibration Coverage, one year	R&S®CW1	
Extended Warranty with Calibration Coverage, two years	R&S®CW2	
Extended Warranty with Accredited Calibration Coverage, one year	R&S®AW1	
Extended Warranty with Accredited Calibration Coverage, two years	R&S®AW2	

[1] For options that are installed, the remaining base unit warranty applies if longer than 1 year. Exception: all batteries have a 1 year warranty.

Service that adds value

- Worldwide
- Local and personalized
- Customized and flexible
- Uncompromising quality
- Long-term dependability

Rohde & Schwarz

The Rohde & Schwarz electronics group offers innovative solutions in the following business fields: test and measurement, broadcast and media, secure communications, cybersecurity, monitoring and network testing. Founded more than 80 years ago, the independent company which is headquartered in Munich, Germany, has an extensive sales and service network with locations in more than 70 countries.

Sustainable product design

- Environmental compatibility and eco-footprint
- Energy efficiency and low emissions
- Longevity and optimized total cost of ownership

Certified Quality Management
ISO 9001

Certified Environmental Management
ISO 14001

Rohde & Schwarz GmbH & Co. KG
www.rohde-schwarz.com

Rohde & Schwarz training
www.training.rohde-schwarz.com

Regional contact

- Europe, Africa, Middle East | +49 89 4129 12345
  customersupport@rohde-schwarz.com
- North America | 1 888 TEST RSA (1 888 837 87 72)
  customer.support@rsa.rohde-schwarz.com
- Latin America | +1 410 910 79 88
  customersupport.la@rohde-schwarz.com
- Asia Pacific | +65 65 13 04 88
  customersupport.asia@rohde-schwarz.com
- China | +86 800 810 82 28 | +86 400 650 58 96
  customersupport.china@rohde-schwarz.com

R&S® is a registered trademark of Rohde & Schwarz GmbH & Co. KG
Trade names are trademarks of the owners

PD 5213.5680.12 | Version 13.00 | December 2017 (as)
R&S®ZVA Vector Network Analyzer

Data without tolerance limits is not binding | Subject to change
© 2005 - 2017 Rohde & Schwarz GmbH & Co. KG | 81671 Munich, Germany

5213568012

5213.5680.12 13.00 PDP 1 en